EX3

TECHNOLOGY

CHAIN HOIST CONTROLLER

SAFE · PRECISE · CERTIFIED

The brand name EXE® identifies a range of products designed for the entertainment & exhibition markets, offering a range of equipment engineered to safely manoeuvre stage equipment, scenery, video walls & other related structures...before, during and after your performance.

Managing increasingly complex events, led us to imagine a world where our most advanced series and third-party products interacts with each other. It's a unique and ambitious project, that we called **ONE FOR ALL**: it's the open source system capable of interaction with third-party producers. A decisive step forward for the interaction of various technologies within the same event.

ALL FOR ONE is designed as a fully integrated system including 'smart' hoists and intelligent controllers, offering plug and play devices. It is the integration between equipment designed to operate as a 'single' stage machine

Index

ONE FOR ALL SOLUTIONS

CHAIN HOIST

01 EXE RISE - ELECTRIC CHAIN HOIST D8+ S.F. 8:1 8
- Overview 8-9
- D8+ 250kg Medium Frame Ultra Compact 10-11
- D8+ 350kg Medium Frame Compact 12-13
- D8+ 500kg Medium Frame 14-15
- D8+ 1000kg Large Frame 16-17
- D8+ 2000kg Large Frame 2 REEVES 18-19
- D8+ 1600kg Extra Large Frame Compact 20-21
- D8+ 2000kg Extra Large Frame 1 REEVE 22-23
- D8+ 2500kg Extra Large Frame 24-25
- D8+ 250kg - 500kg Single Phase 26-27

02 EXE ACE - ELECTRIC CHAIN HOIST D8 30
- Overview 30-31
- D8 250kg Medium Frame Ultra Compact 32-33
- D8 500kg Medium Frame Compact 34-35
- D8 1000kg Medium Frame 36-37
- D8 2000kg Extra Large Frame Compact 38-39

03 EXE VARIO - ELECTRIC CHAIN HOIST D8+ VARIABLE SPEED 42
- Overview 43
- D8+ 500kg Variable Speed 44
- D8+ 1000kg Variable Speed 45

04 ACCESSORIES 46
- EXE Technology Safety Helmet 47
- Flight Case 48-49
- Chain Bag / Rain Cover 50-51
- Chain 52
- Chain Slider / Touring Slider 53
- Hook 54
- Upgrades 55

05 EXE HCB - MANUAL CHAIN HOIST 56
- EXE HCB - Hand Chain Block 57

06 EXE IBEAM - TROLLEY 58
- EXE IBEAM Trolley 59

CONTROLLER

01 EXE DRIVE - CONTROLLER 60
- Overview 61
- DH1 / DH2 62-63
- DB4 / DB4-LV 64-65
- DB8 / DB8-LV 66-67
- DL4 / DL4-LV 68-69
- DL8 / DL8-LV 70-71
- DL8H 72-73
- DL16 / DL16-LV 74-75
- DL24 / DL24-LV 76-77
- DW8 78-79
- DC4R / DC8R / DC4R-SP 80-81
- RHG / RHGR / RHGC 82-83
- RH4C / RH8C / RH16C / RH24C 84-85
- SP2-LV / RH1C-LV 86
- Compatibility Chart 87

02 EXE SENSE - TOUCHSCREEN CONTROLLER 88
- Overview 89
- Features 90-91
- DL8S V2 6U 92
- DLRH Remote control 93
- DL8S-1 V2 6U CEE 95
- DL8S-2 V2 6U CEE+HARTING wiring 96-97
- DL8S-1 V2 6U CEE+SOCAPEX wiring 98-99
- Compatibility Chart 101

ALL FOR ONE SOLUTIONS

ALL FOR ONE - SYSTEMS OVERVIEW 102-103
- Overview 104-105

01 EXE B 106
02 EXE D 107
03 EXE X 108
04 EXE E 109
05 EXE K 110

EXE TECHNOLOGY

MILESTONES

2013 — EXE RISE

SMALL AND LARGE FRAME

2014 — EXE DST

DST40

2014 — EXE DRIVE

DL & DB PRODUCTS

2015 — EXE CELL

WINNER OF THE plasa 2015 AWARDS FOR INNOVATION

LC-PRO CONFIGURATION

2016 — EXE RISE

MEDIUM FRAME

2017 — EXE VARIO

VARIABLE SPEED

2018 — EXE DST

DST52
DST66

EXTRA LARGE FRAME

MEDIUM FRAME COMPACT

MEDIUM FRAME
ULTRA COMPACT

EX3 DRIVE

ALL FOR ONE SOLUTIONS ONE FOR ALL

EX3 FLEXA

2019 | 2020 | 2021 | 2022 | 2023 | 2024

EX3 RISE

EX3 RISE

EX3 RISE

WIRELESS CONTROLLER

ONE FOR ALL - ALL FOR ONE SOLUTIONS

EXE FLEXA LOAD CELLS

CHAIN HOIST
CASSIFICATION

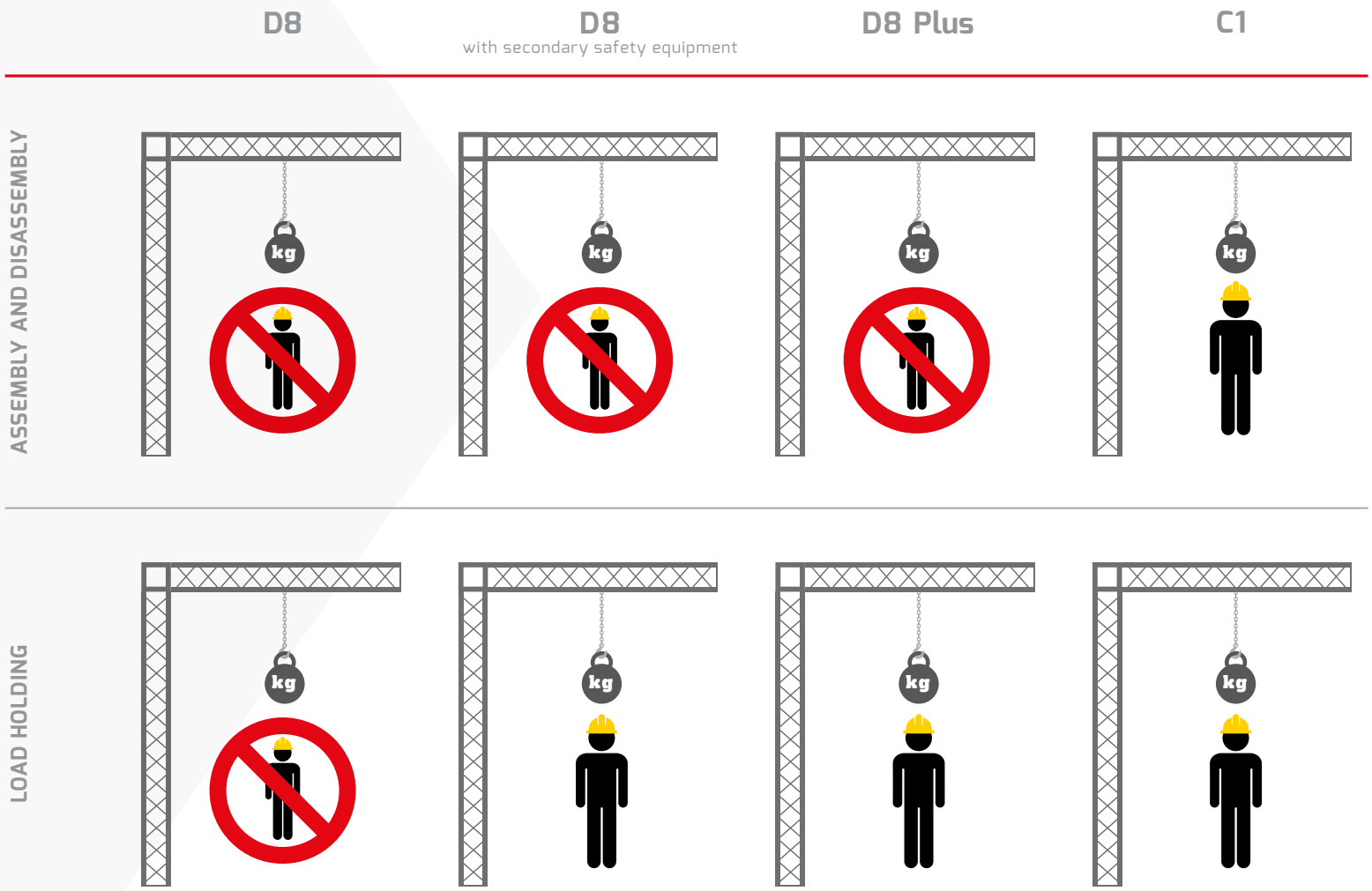

CHAIN HOIST
MECHANISM CASSIFICATION

VERTICAL MOVEMENTS

ISO 4301	FEM 9.511	DUTY FACTOR OF MOTOR	MINUTES PER HOUR *Uniformly Distributed Work Period*	STARTS PER HOUR	HOUR PER DAY	HOUR / 10 YEARS Bearing Time
M1	1Dm	15%	9	90	≤ 0,25	400
M2	1Cm	20%	12	120	≤ 0,5	800
M3	1Bm	25%	15	150	≤1	1600
M4	1Am	30%	18	180	≤ 2	3200
M5	2m	40%	24	240	≤ 4	6300
M6	3m	50%	30	300	≤ 8	12500

RATE OF LOADING

	Average time of supposed daily operation T_m *(hour)*		to 0.25	from 0.25 to 0.5	from 0.5 to 1	from 1 to 2	from 2 to 4	from 4 to 8	from 8 to 16
	Rate of loading Total operating Time *(hour)*		to 400	to 800	to 1600	to 3200	to 6300	to 12500	to 25000
LIGHT	*When normally working with approx.. 1/3 of W.L.L. and rarely with W.L.L.*	ISO FEM	--	M1 1Dm	M2 1Cm	M3 1Bm	M4 1Am	M5 2m	M6 3m
MEDIUM	*When normally working with approx.. 1/3 to 2/3 of W.L.L. and sometime W.L.L.*	ISO FEM	M1 1Dm	M2 1Cm	M3 1Bm	M4 1Am	M5 2m	M6 3m	M7 4m
HEAVY	*When normally working with approx.. to 2/3 of W.L.L. and often with W.L.L.*	ISO FEM	M2 1Cm	M3 1Bm	M4 1Am	M5 2m	M6 3m	M7 4m	M8 5m
VERY HEAVY	*When normally working with W.L.L. or near W.L.L.*	ISO FEM	M3 1Bm	M4 1Am	M5 2m	M6 3m	M7 4m	M8 5m	--

CHAIN HOIST
FEATURES

SELF CLIMBING OR STANDARD SUSPENSION

Self climbing or Standard Suspension, without any adjustments required. Swivel hooks on the chain and body reduces the risk of chain twist and allows easy positioning.

BODY

The BODY is made in cast aluminium to be as light, yet as strong as possible. The matte black finish is corrosion resistant and non reflective.

CHAIN-BAG BRACKET

The CHAIN-BAG BRACKET allows the hoist to be used motor up or down. The design ensures the bag is positioned correctly to accept chain without the need for any adjustment, reducing the chance of chain spills.

EXTERNAL CHAIN GUIDE

Made from a special PVC is used to minimise the chance of chain jamming should the chain become twisted. This sacrificial plate helps protect both the chain and internal chain guides. (Extra Large body hoists are equipped with a steel guide plate).

CHAIN

CHAIN is a DAT type, RTS chain made of galvanized alloy steel grade 80 and complies with the standard DIN EN 818-7. Available in BLACK colour with T grade and DAT type. The quality is RTS and the surface is phosphate.

DOUBLE BRAKE & SINGLE BRAKE

DOUBLE BRAKE: EXE Rise are supplied with double brake as standard. The brakes are supplied as complete units which allows for trouble free use and quick and easy inspection.
SINGLE BRAKE: EXE Ace are supplied with single brake as standard

IRON AND ASBESTOS FREE BRAKE

IRON AND ASBESTOS FREE BRAKE shoes and stainless steel brake discs will not rust in the presence of moisture, preventing brake assemblies from seizing.

CLUTCH

Clutch outside the load path positioned on the motor shaft in front of the motor assembly. With this arrangement, the brakes will hold the load in the unlikely event of a clutch failure.

GEAR BOX

GEAR BOX is manufactured with a thicker aluminum wall, comparing to the rest of the body, to respond to the very stringent mechanical requirements.

BEARING GREASE

BEARING GREASE on medium and large frame and OIL on extra large frame. They are high load, designed for the effective lubrication and protection of plain bearings and sliding surfaces used in extreme environments, particularly in heavily loaded.

HANDLES

EXE Rise chain hoists have handles that work in either orientation. Regulations state handles shall be provided to make access to hoist the easy in any orientation.

LOAD WHEEL

All EXE Rise chain hoists have load wheels with 5 pockets; this ensures compliance with European standards and delivers a smooth, quiet movement. Load wheels are heat treated.

LOW OPERATIONAL NOISE

With just 67.5 dBA the EXE Rise chain hoist are very silent and now you can do take the quiet jobs.

HERTZ / VOLT

EXE Rise chain hoist technical data have been calculated considering European power and control supply 230/400VAC – 3 – 50Hz. On request it is possible to have technical data at the different power and control supply and at the different frequency values.

CE MARK

EXE Rise hoists are CE marked in acordance with the requirements of the machinery directive 2006/42/EC.

01

EXE RISE

EXE RISE D8+ CHAIN HOIST
FIXED SPEED, PERFORMANCE ORIENTED, MADE IN ITALY

Fixed speed D8+ EXE Rise chain hoists have been specifically designed to satisfy the demanding needs and requests of the entertainment and touring market. Years of research and development have contributed to an extremely performance-oriented, precise and safe range of hoists that see customer trust increasing exponentially all over the world.

The electrical-mechanical features and high quality components of the hoist body are made in Italy, making EXE Rise chain hoists unique and unmatched on the international market.

Corrosion resistant aluminium alloy frames, non-reflective matte finish, housing a 5 pocket load wheel, complete double-brake units, and a clutch positioned outside of the load path. High quality D-A-T, case hardened steel chain either zinc plated, or black phosphated. Alloy steel swivel hooks with spring-loaded latches and the working load limit boldly marked at the chain hook.

All EXE Rise chain hoists are D8 plus with a safety factor of 8-to-1 and can be ordered with either direct or low voltage control. Compatibility with all EXE Drive and EXE Sense motor controllers, and the possibility of equipping them with an encoder, limit switch and load cell, allow EXE Rise chain hoists to meet all of our customers needs.

Overview

EXE RISE D8+ FIXED SPEED CHAIN HOISTS

		MEDIUM FRAME ULTRA COMPACT	MEDIUM FRAME COMPACT	MEDIUM FRAME	LARGE FRAME 1 REEVE	EXTRA LARGE FRAME COMPACT	EXTRA LARGE FRAME	
		250kg	350kg	500kg	1000kg	1600kg	2000kg	2500kg
1 FALL	DIRECT CONTROL							
1 FALL	LOW VOLTAGE CONTROL							
		+	+	+	+	+	+	+
2 FALL	DC / LVC	DOUBLE REEVE PULLEY			DOUBLE REEVE PULLEY / CHAIN HOOK	DOUBLE REEVE CHAIN HOOK		
		2x WLL						

EXE RISE

D8+ 250kg

MEDIUM FRAME ULTRA COMPACT

GENERAL FEATURES

MODEL	EXE Rise chain hoist D8+ 250kg DC
TYPE OF CONTROL	Direct
FEM CLASS	2m
DUTY FACTOR	40%
START PER HOUR	240
BEARING TIME / 10 YEARS	6300h
FALLS OF CHAIN	1
TYPE OF CHAIN	DIN EN 818-7 - type DAT steel 80 grade Zinc galvanized or phosphated
SIZE OF CHAIN	5x15 mm
CHAIN SELF-WEIGHT	0.54 kg/m
SAFETY FACTOR	8:1
IP RATE	55
INSULATION CLASS (TEMPERATURE CLASS)	F according to CEI 15-26
LOAD WHEEL	5 pockets
NOISE LEVEL	67.5 dB @ full load
CONNECTION CABLE LENGHT	75 ± 5 cm

The EXE Rise D8+ 250kg Medium Frame Ultra Compact chain hoist is made from extremely light cast aluminum. Its low profile frame makes it ideal for squeezing into small spaces and achieving the greatest possible headroom in low-ceiling venues. This lightweight, compact hoist is ideal for wedding receptions, corporate event venues, and for simple rigs in educational, religious or theatrical settings.

EXE RISE D8+ 250kg

MEDIUM FRAME ULTRA COMPACT

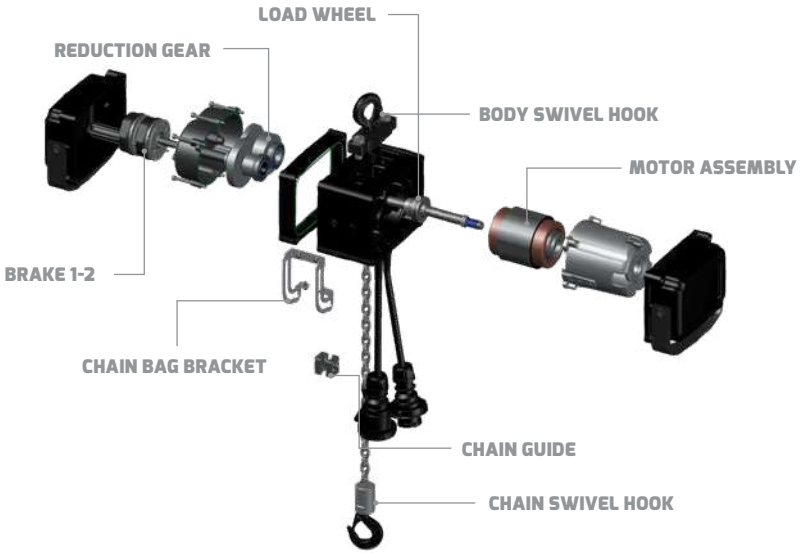

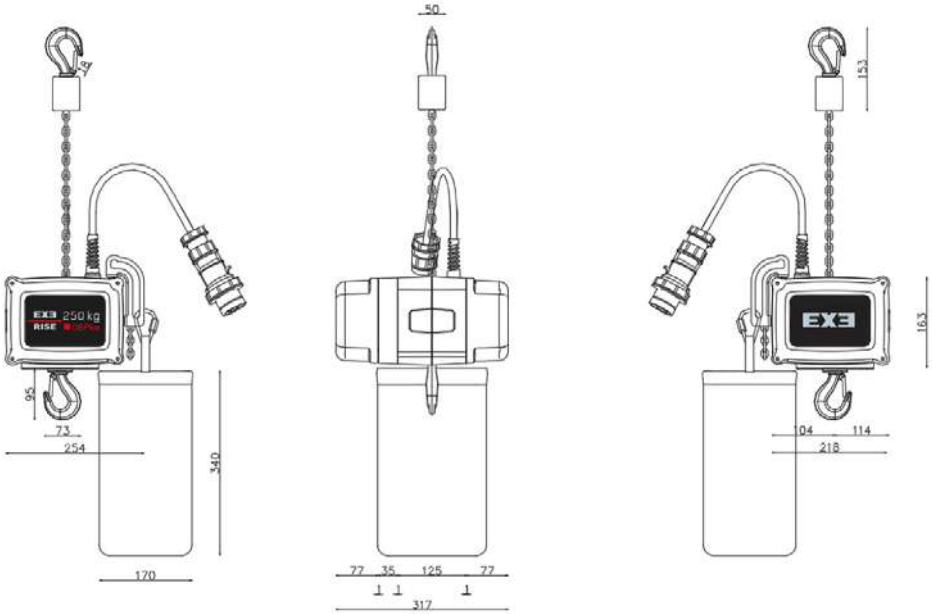

*The values are reported in **mm.***

DIRECT CONTROL	
WORKING LOAD LIMIT	250 kg
FREQUENCY	50 Hz
LIFTING SPEED	4m/min ± 1%
MOTOR POWER	0.36 kW
OPERATING VOLTAGE Δ/Y	230/400 VAC - 3 - 50 Hz
3PH CURRENT	Δ 1.84 A - Y 1.06 A
Δ POWER SUPPLY CONNECTOR (*)	CEE 16A 9h 230VAC - 3PH + G plug
Y POWER SUPPLY CONNECTOR	CEE 16A 6h 400VAC - 3PH + G plug
REVOLUTIONS PER MINUTE	1400
NUMBER OF BRAKES	2
DC BRAKE SIZE	06
DC BRAKE POWER	20 W
DC BRAKE OPERATING VOLTAGE	103 VDC
DC BRAKE RATED TORQUE	4 Nm
DC BRAKE RATED TORQUE REDUCTION AT THE SPEED SPECIFICATION x %	87% (1500 r/min)
DC BRAKE GAP (SL)	0.2 mm
LIMIT SWITCH (*)	2 positions
ENCODER (*)	Incremental or Absolute
SELF-WEIGHT	19.5 kg

D8+ 198KG MODEL ALSO AVAILABLE

OTHER OPERATING VOLTAGE & FREQUENCY ARE AVAILABLE

EXE RISE

D8+ 350kg

MEDIUM FRAME COMPACT

GENERAL FEATURES

MODEL (*)	EXE Rise chain hoist D8+ 350kg DC/LVC
TYPE OF CONTROL	Direct or Low Voltage
FEM CLASS	2m
DUTY FACTOR	40%
START PER HOUR	240
BEARING TIME / 10 YEARS	6300h
FALLS OF CHAIN	1
TYPE OF CHAIN	DIN EN 818-7 - type DAT steel 80 grade Zinc galvanized or phosphated
SIZE OF CHAIN	5x15 mm
CHAIN SELF-WEIGHT	0.54 kg/m
SAFETY FACTOR	8:1
IP RATE	55
INSULATION CLASS (TEMPERATURE CLASS)	F according to CEI 15-26
LOAD WHEEL	5 pockets
NOISE LEVEL	67.5 dB @ full load
CONNECTION CABLE LENGHT	75 ± 5 cm

(*) Also available 250kg FEM CLASS 3m

The EXE Rise D8+ 350kg Medium Frame Compact chain hoist is made from extremely light cast aluminum. Its low profile frame makes it ideal for squeezing into small spaces and achieving the greatest possible headroom in low-ceiling venues. This lightweight, compact hoist is ideal for wedding receptions, corporate event venues, and for simple rigs in educational, religious or theatrical settings.

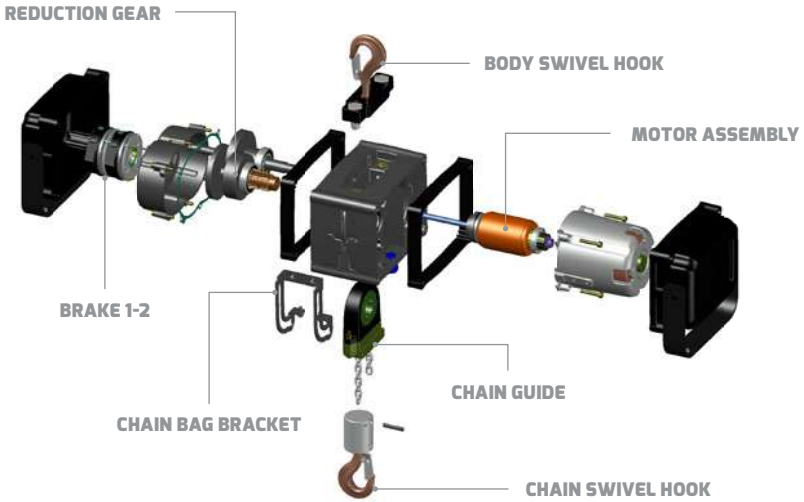

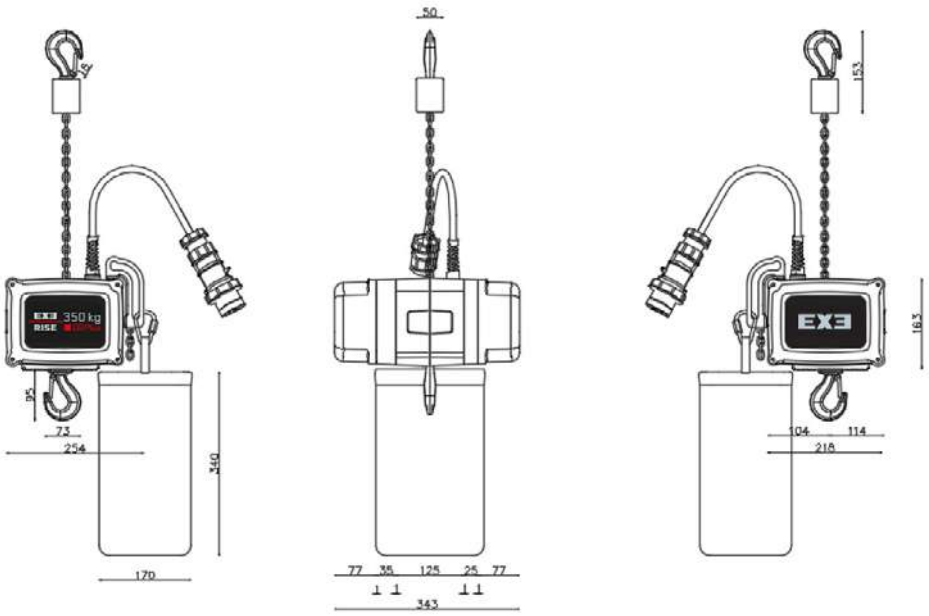

*The values are reported in **mm.** DC model has only one cable.*

EXE RISE D8+ 350kg

MEDIUM FRAME COMPACT

DIRECT CONTROL	
WORKING LOAD LIMIT	350 kg
FREQUENCY	50 Hz
LIFTING SPEED	4m/min ± 1%
MOTOR POWER	0.5 kW
OPERATING VOLTAGE Δ/Y	230/400 VAC - 3 - 50 Hz
3PH CURRENT	Δ 2.94 A - Y 1.70 A
Δ POWER SUPPLY CONNECTOR (*)	CEE 16A 9h 230VAC - 3PH + G plug
Y POWER SUPPLY CONNECTOR	CEE 16A 6h 400VAC - 3PH + G plug
REVOLUTIONS PER MINUTE	1400
NUMBER OF BRAKES	2
DC BRAKE SIZE	06
DC BRAKE POWER	20 W
DC BRAKE OPERATING VOLTAGE	103 VDC
DC BRAKE RATED TORQUE	4 Nm
DC BRAKE RATED TORQUE REDUCTION AT THE SPEED SPECIFICATION x %	87% (1500 r/min)
DC BRAKE GAP (SL)	0.2 mm
LIMIT SWITCH (*)	2 positions
ENCODER (*)	Incremental or Absolute
SELF-WEIGHT	DC: 21.5 kg | LVC: 23kg
LOW VOLTAGE CONTROL	
CONTROL SUPPLY CONNECTOR	CEE 16A 4h 24VAC - 3PH + G black socket
LIMIT SWITCH	2 positions

(*) only on request

Brake side *Motor side*

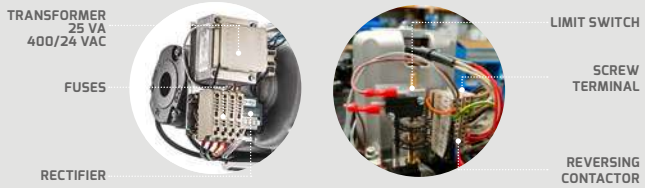

OTHER OPERATING VOLTAGE & FREQUENCY ARE AVAILABLE

EXE RISE

D8+ 500kg

MEDIUM FRAME

GENERAL FEATURES

MODEL	EXE Rise chain hoist D8+ 500kg
TYPE OF CONTROL	Direct or Low Voltage
FEM CLASS	2m
DUTY FACTOR	40%
START PER HOUR	240
BEARING TIME / 10 YEARS	6300h
FALLS OF CHAIN	1
TYPE OF CHAIN	DIN EN 818-7 - type DAT steel 80 grade Zinc galvanized or phosphated
SIZE OF CHAIN	6x18 mm
CHAIN SELF-WEIGHT	0.78 kg/m
SAFETY FACTOR	8:1
IP RATE	55
INSULATION CLASS (TEMPERATURE CLASS)	F according to CEI 15-26
LOAD WHEEL	5 pockets
NOISE LEVEL	67.5 dB @ full load
CONNECTION CABLE LENGHT	75 ± 5 cm

The EXE Rise D8+ 500kg Medium Frame chain hoist is made from extremely light cast aluminum. It is small, but mighty with a self-weight of only 24kg. That's a lifting power of 20 times its self-weight making it ideal for soundstages, nightclubs, exhibition halls, concert halls, amphitheatres and other outdoor venues

EXE RISE D8+ 500kg

MEDIUM FRAME

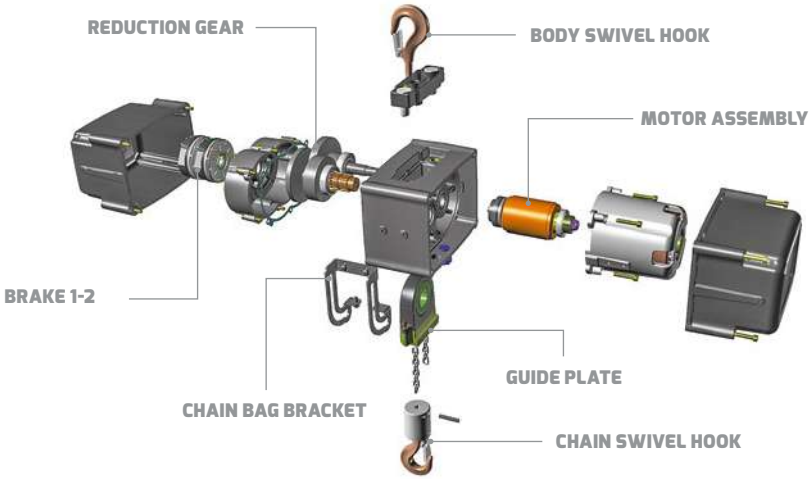

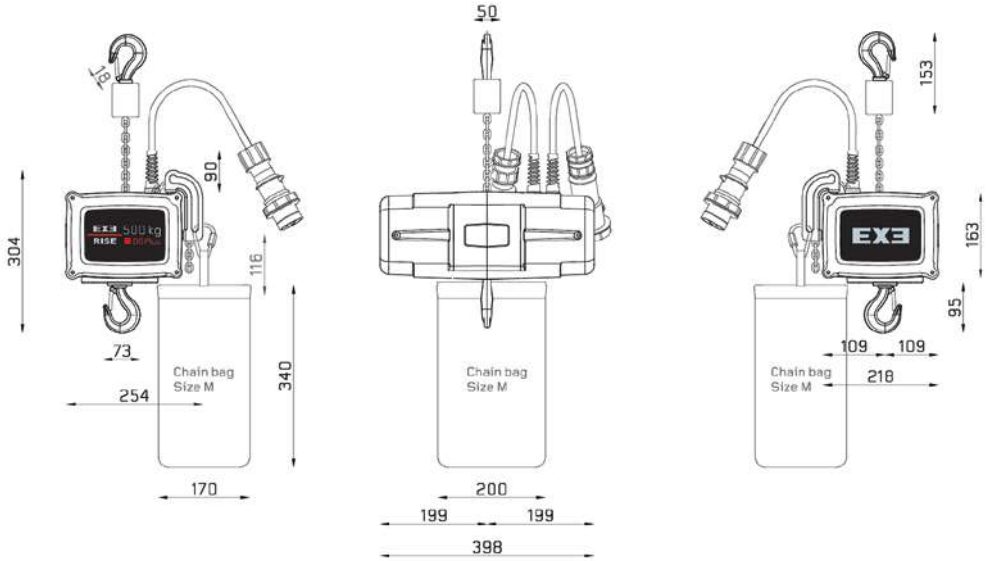

*The values are reported in **mm.** DC model has only one cable.*

DIRECT CONTROL	
WORKING LOAD LIMIT	500 kg
FREQUENCY	50 Hz
LIFTING SPEED	4m/min ± 1%
MOTOR POWER	0.8 kW
OPERATING VOLTAGE Δ/Y	230/400 VAC - 3 - 50 Hz
3PH CURRENT	Δ 3.93 A - Y 2.27 A
Δ POWER SUPPLY CONNECTOR (*)	CEE 16A 9h 230VAC - 3PH + G plug
Y POWER SUPPLY CONNECTOR	CEE 16A 6h 400VAC - 3PH + G plug
REVOLUTIONS PER MINUTE	1400
NUMBER OF BRAKES	2
DC BRAKE SIZE	06
DC BRAKE POWER	20 W
DC BRAKE OPERATING VOLTAGE	103 VDC
DC BRAKE RATED TORQUE	4 Nm
DC BRAKE RATED TORQUE REDUCTION AT THE SPEED SPECIFICATION x %	87% (1500 r/min)
DC BRAKE GAP (SL)	0.2 mm
LIMIT SWITCH (*)	2 positions
ENCODER (*)	Incremental or Absolute
SELF-WEIGHT	24 kg
LOW VOLTAGE CONTROL	
CONTROL SUPPLY CONNECTOR	CEE 16A 4h 24VAC - 3PH + G black socket
LIMIT SWITCH	2 positions

(*) only on request

Brake side *Motor side*

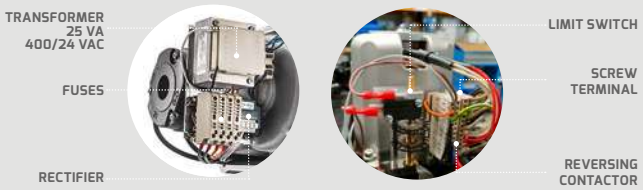

OTHER OPERATING VOLTAGE & FREQUENCY ARE AVAILABLE

EXE RISE

D8+ 1000kg

LARGE FRAME

GENERAL FEATURES

MODEL	EXE Rise chain hoist D8+ 1000kg
TYPE OF CONTROL	Direct or Low Voltage
FEM CLASS	2m
DUTY FACTOR	40%
START PER HOUR	240
BEARING TIME / 10 YEARS	6300h
FALLS OF CHAIN	1
TYPE OF CHAIN	DIN EN 818-7 - type DAT steel 80 grade Zinc galvanized or phosphated
SIZE OF CHAIN	8x24 mm
CHAIN SELF-WEIGHT	1.39 kg/m
SAFETY FACTOR	8:1
IP RATE	55
INSULATION CLASS (TEMPERATURE CLASS)	F according to CEI 15-26
LOAD WHEEL	5 pockets
NOISE LEVEL	67.5 dB @ full load
CONNECTION CABLE LENGHT	75 ± 5 cm

The EXE Rise D8+ 1000kg Large Frame chain hoist single fall hoist is made by gravity casting is durably designed for a heavy duty life cycle. This hoist is everlasting with proper care and maintenance, which makes it ideal for the rugged life on-tour. It is a fantastic option for heavier grid systems often seen in festivals, outdoor venues, arenas, and film sets.

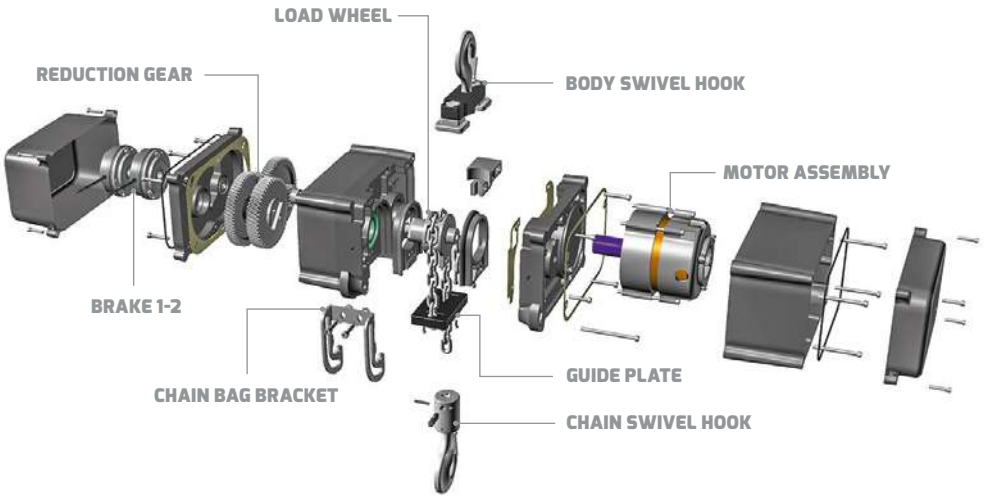

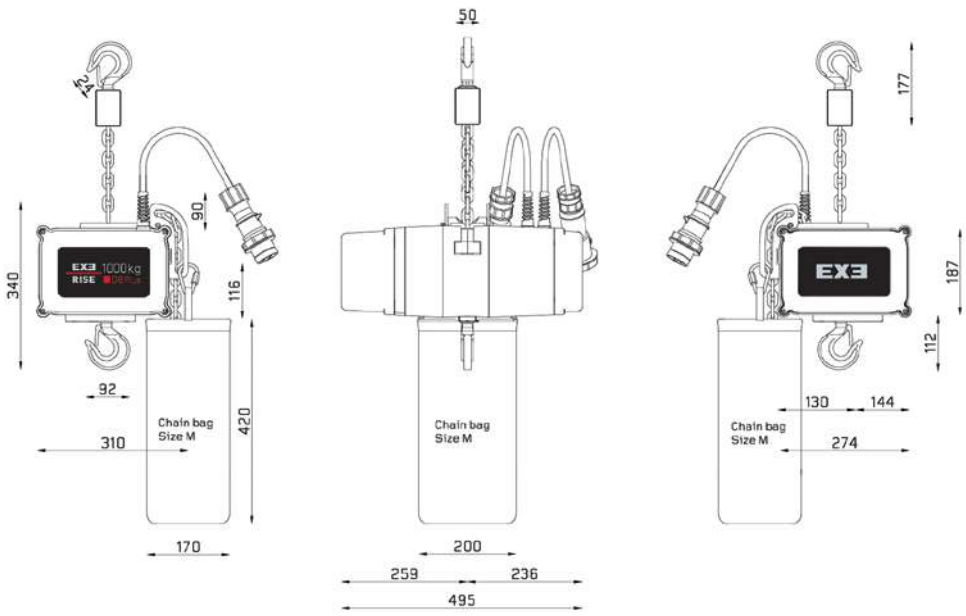

*The values are reported in **mm.** DC model has only one cable.*

EXE RISE D8+ 1000kg

LARGE FRAME

DIRECT CONTROL	
WORKING LOAD LIMIT	1000 kg
FREQUENCY	50 Hz
LIFTING SPEED	4m/min ± 1%
MOTOR POWER	1.0 kW
OPERATING VOLTAGE Δ/Y	230/400 VAC - 3 - 50 Hz
3PH CURRENT	Δ 4.62 A - Y 2.67 A
Δ POWER SUPPLY CONNECTOR (*)	CEE 16A 9h 230VAC - 3PH + G plug
Y POWER SUPPLY CONNECTOR	CEE 16A 6h 400VAC - 3PH + G plug
REVOLUTIONS PER MINUTE	1400
NUMBER OF BRAKES	2
DC BRAKE SIZE	08
DC BRAKE POWER	25 W
DC BRAKE OPERATING VOLTAGE	103 VDC
DC BRAKE RATED TORQUE	8 Nm
DC BRAKE RATED TORQUE REDUCTION AT THE SPEED SPECIFICATION x %	85% (1500 r/min)
DC BRAKE GAP (SL)	0.2 mm
LIMIT SWITCH (*)	2 positions
ENCODER (*)	Incremental or Absolute
SELF-WEIGHT	43 kg
LOW VOLTAGE CONTROL	
CONTROL SUPPLY CONNECTOR	CEE 16A 4h 24VAC - 3PH + G black socket
LIMIT SWITCH	2 positions

(*) only on request

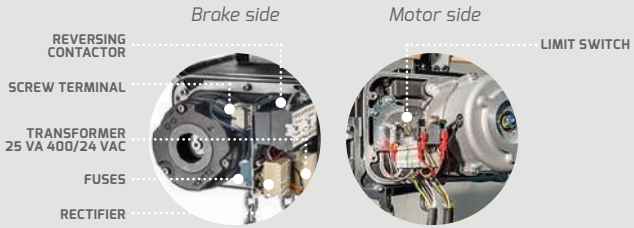

OTHER OPERATING VOLTAGE & FREQUENCY ARE AVAILABLE

EXE RISE

D8+ 2000kg

2 REEVES

LARGE FRAME

GENERAL FEATURES

MODEL	EXE Rise chain hoist D8+ 2000kg 2F
TYPE OF CONTROL	Direct or Low Voltage
FEM CLASS	2m
DUTY FACTOR	40%
START PER HOUR	240
BEARING TIME / 10 YEARS	6300h
FALLS OF CHAIN	2
TYPE OF CHAIN	DIN EN 818-7 - type DAT steel 80 grade Zinc galvanized or phosphated
SIZE OF CHAIN	8x24 mm
CHAIN SELF-WEIGHT	1.39 kg/m
SAFETY FACTOR	8:1
IP RATE	55
INSULATION CLASS (TEMPERATURE CLASS)	F according to CEI 15-26
LOAD WHEEL	5 pockets
NOISE LEVEL	67.5 dB @ full load
CONNECTION CABLE LENGHT	75 ± 5 cm

The EXE Rise D8+ 2000Kg Large Frame chain hoist double fall is made by gravity casting, durably designed for a heavy duty life cycle. This hoist is everlasting with proper care and maintenance, which makes it ideal for the rugged life on-tour. It's a fantastic option for heavier grid systems often seen in festivals, outdoor venues, arenas and film sets.

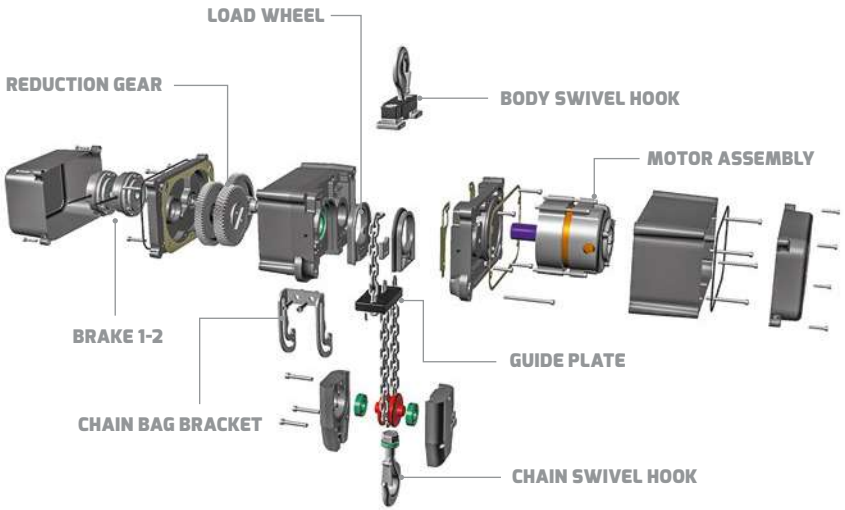

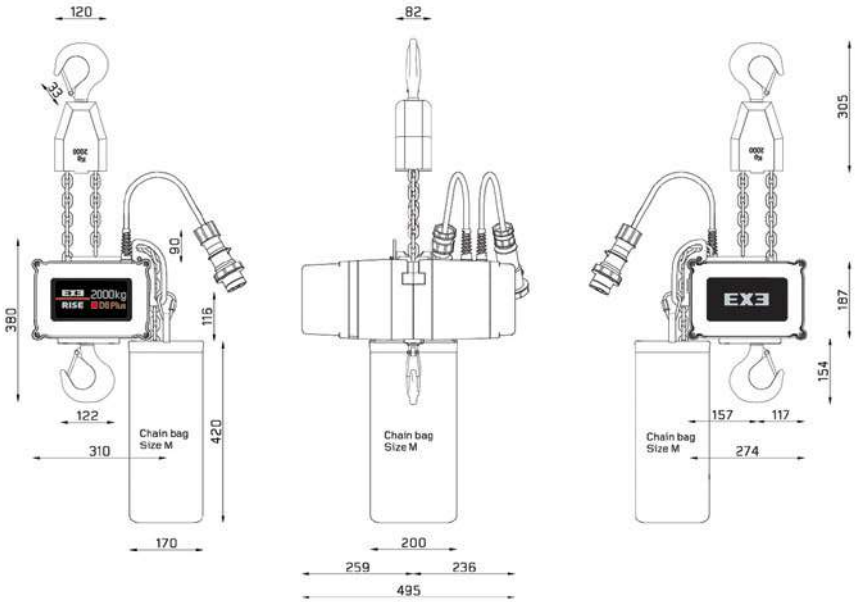

*The values are reported in **mm.** DC model has only one cable.*

EXE RISE D8+ 2000kg 2F

LARGE FRAME

DIRECT CONTROL	
WORKING LOAD LIMIT	2000 kg
FREQUENCY	50 Hz
LIFTING SPEED	4m/min ± 1%
MOTOR POWER	1.6 kW
OPERATING VOLTAGE Δ/Y	230/400 VAC - 3 - 50 Hz
3PH CURRENT	Δ 8.37 A - Y 4.83 A
Δ POWER SUPPLY CONNECTOR (*)	CEE 16A 9h 230VAC - 3PH + G plug
Y POWER SUPPLY CONNECTOR	CEE 16A 6h 400VAC - 3PH + G plug
REVOLUTIONS PER MINUTE	1400
NUMBER OF BRAKES	2
DC BRAKE SIZE	10
DC BRAKE POWER	30 W
DC BRAKE OPERATING VOLTAGE	103 VDC
DC BRAKE RATED TORQUE	16 Nm
DC BRAKE RATED TORQUE REDUCTION AT THE SPEED SPECIFICATION x %	83% (1500 r/min)
DC BRAKE GAP (SL)	0.2 mm
LIMIT SWITCH (*)	2 positions
ENCODER (*)	Incremental or Absolute
SELF-WEIGHT	45 kg
LOW VOLTAGE CONTROL	
CONTROL SUPPLY CONNECTOR	CEE 16A 4h 24VAC - 3PH + G black socket
LIMIT SWITCH	2 positions

(*) only on request

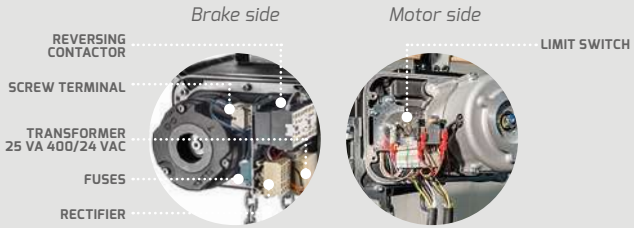

OTHER OPERATING VOLTAGE & FREQUENCY ARE AVAILABLE

EXE RISE

D8+ 1600kg

1 REEVE

EXTRA LARGE FRAME COMPACT

GENERAL FEATURES

MODEL	EXE Rise chain hoist D8+ 1600kg
TYPE OF CONTROL	Direct or Low Voltage
FEM CLASS	3m
DUTY FACTOR	50%
START PER HOUR	300
BEARING TIME / 10 YEARS	12500h
FALLS OF CHAIN	1
TYPE OF CHAIN	DIN EN 818-7 - type DAT steel 80 grade Zinc galvanized or phosphated
SIZE OF CHAIN	10x28 mm
CHAIN SELF-WEIGHT	2.24 kg/m
SAFETY FACTOR	8:1
IP RATE	55
INSULATION CLASS (TEMPERATURE CLASS)	F according to CEI 15-26
LOAD WHEEL	5 pockets
NOISE LEVEL	67.5 dB @ full load
CONNECTION CABLE LENGHT	75 ± 5 cm

The EXE Rise D8+ 1600kg Extra Large Frame Compact chain hoist is the solution when one-ton isn't enough capacity, but you don't want the monstrosity of a bulkier extra large frame. This beauty has been expertly designed to retain an 8-to-1 safety factor in conformance with D8+ requirements while mantaining its figure. Fashionably safer with a single fall chain to avoid the risk of unintentional twist, which is common with double-reeved hoists. There's enough for you to double-triple-quadruple check. This very capable hoist has a FEM class rating of 3m. Use it for large outdoor structures and permanent installations.

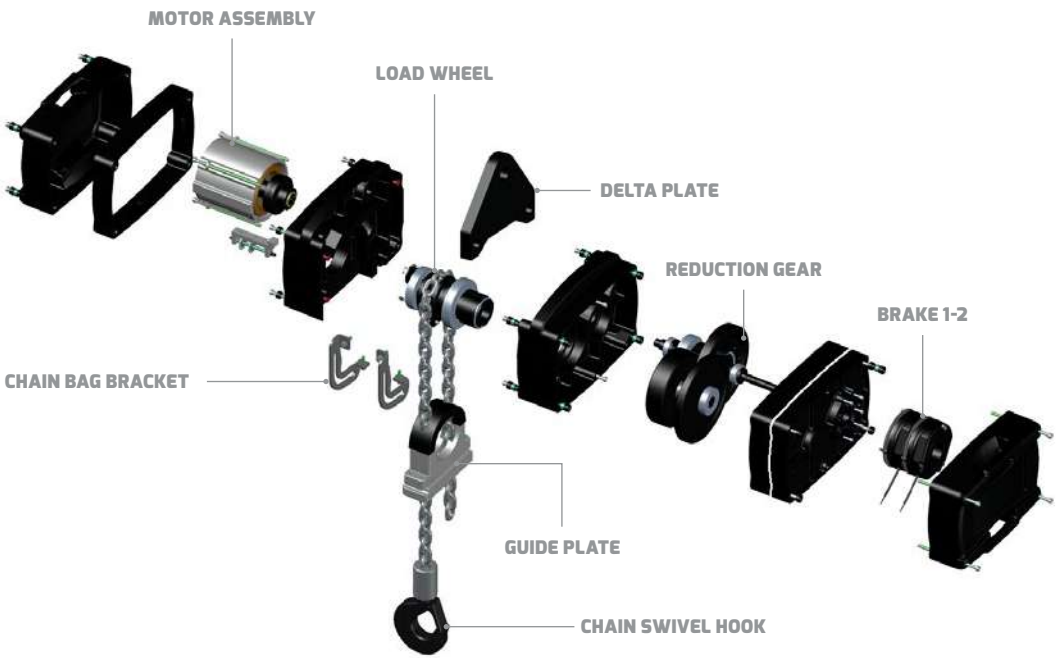

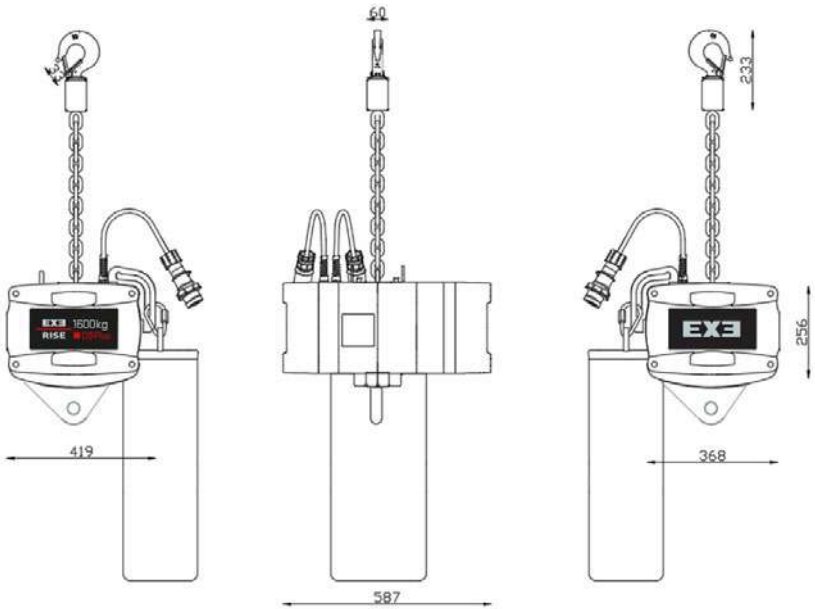

*The values are reported in **mm.** DC model has only one cable.*

EXE RISE D8+ 1600kg

EXTRA LARGE FRAME COMPACT

DIRECT CONTROL	
WORKING LOAD LIMIT	1600 kg
FREQUENCY	50 Hz
LIFTING SPEED	4m/min ± 1%
MOTOR POWER	2.0 kW
OPERATING VOLTAGE Δ/Y	230/400 VAC - 3 - 50 Hz
3PH CURRENT	Δ 9.9 A - Y 5.7 A
Δ POWER SUPPLY CONNECTOR (*)	CEE 16A 9h 230VAC - 3PH + G plug
Y POWER SUPPLY CONNECTOR	CEE 16A 6h 400VAC - 3PH + G plug
REVOLUTIONS PER MINUTE	1400
NUMBER OF BRAKES	2
DC BRAKE SIZE	10
DC BRAKE POWER	30 W
DC BRAKE OPERATING VOLTAGE	103 VDC
DC BRAKE RATED TORQUE	16 Nm
DC BRAKE RATED TORQUE REDUCTION AT THE SPEED SPECIFICATION x %	83% (1500 r/min)
DC BRAKE GAP (SL)	0.2 mm
LIMIT SWITCH	2 positions
ENCODER (*)	Incremental or Absolute
SELF-WEIGHT	110 kg
LOW VOLTAGE CONTROL	
CONTROL SUPPLY CONNECTOR	CEE 16A 4h 24VAC - 3PH + G black socket
LIMIT SWITCH	2 positions

(*) only on request

OTHER OPERATING VOLTAGE & FREQUENCY ARE AVAILABLE

EXE RISE

D8+ 2000kg

1 REEVE

EXTRA LARGE FRAME

GENERAL FEATURES

MODEL	EXE Rise chain hoist D8+ 2000kg
TYPE OF CONTROL	Direct or Low Voltage
FEM CLASS	3m
DUTY FACTOR	50%
START PER HOUR	300
BEARING TIME / 10 YEARS	12500h
FALLS OF CHAIN	1
TYPE OF CHAIN	DIN EN 818-7 - type DAT steel 80 grade Zinc galvanized or phosphated
SIZE OF CHAIN	11.3x31 mm
CHAIN SELF-WEIGHT	2.85 kg/m
SAFETY FACTOR	8:1
IP RATE	55
INSULATION CLASS (TEMPERATURE CLASS)	F according to CEI 15-26
LOAD WHEEL	5 pockets
NOISE LEVEL	67.5 dB @ full load
CONNECTION CABLE LENGHT	75 ± 5 cm

The EXE Rise D8+ 2000kg Extra Large Frame chain hoist single reeve is extremely strong, corrosion resistant and no-reflective as possible due to the body made from cast aluminium with matt black finish. Handling and lifting of the chain hoist is facilitated by handles that work in either operational orientation. The possibility of using the chain hoist in both Standard and Self Climbing positions, combined with its swivel or fixed hook feature, increase practicality and versatility.

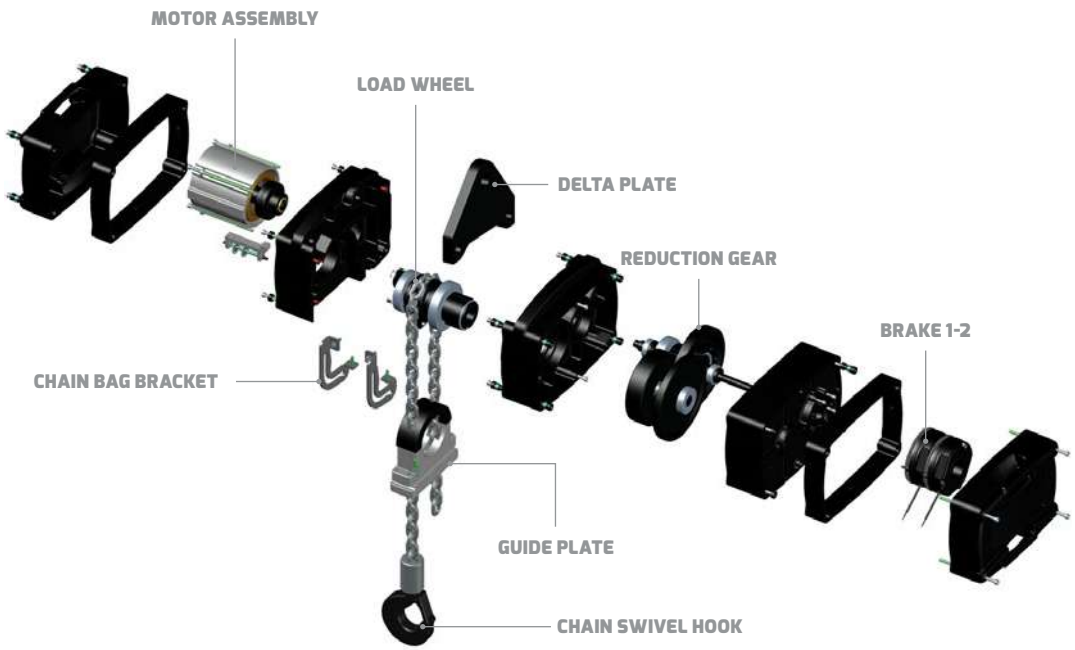

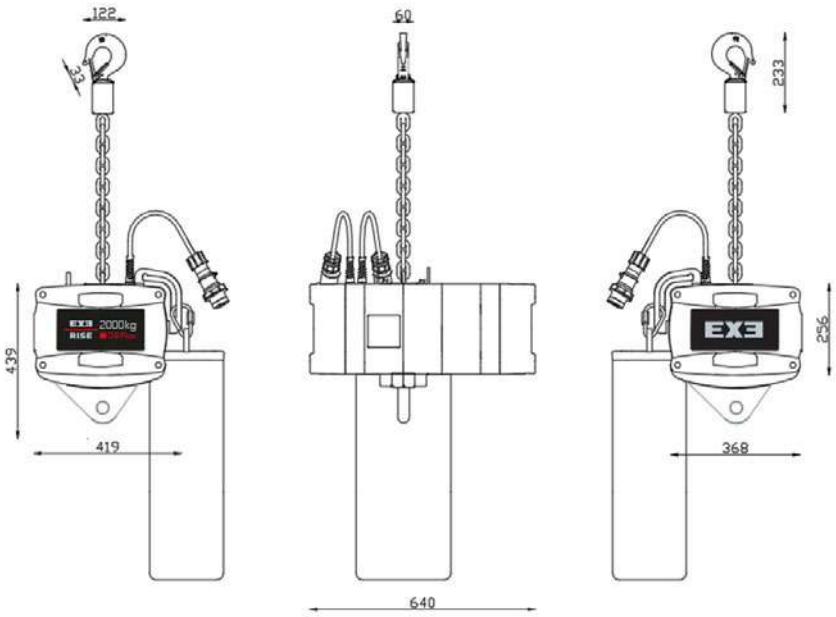

*The values are reported in **mm.** DC model has only one cable.*

EXE RISE D8+ 2000kg

EXTRA LARGE FRAME

DIRECT CONTROL	
WORKING LOAD LIMIT	2000 kg
FREQUENCY	50 Hz
LIFTING SPEED	4m/min ± 1%
MOTOR POWER	2.0 kW
OPERATING VOLTAGE Δ/Y	230/400 VAC - 3 - 50 Hz
3PH CURRENT	Δ 9.9 A - Y 5.7 A
Δ POWER SUPPLY CONNECTOR (*)	CEE 16A 9h 230VAC - 3PH + G plug
Y POWER SUPPLY CONNECTOR	CEE 16A 6h 400VAC - 3PH + G plug
REVOLUTIONS PER MINUTE	1400
NUMBER OF BRAKES	2
DC BRAKE SIZE	12
DC BRAKE POWER	40 W
DC BRAKE OPERATING VOLTAGE	103 VDC
DC BRAKE RATED TORQUE	32 Nm
DC BRAKE RATED TORQUE REDUCTION AT THE SPEED SPECIFICATION x %	81% (1500 r/min)
DC BRAKE GAP (SL)	0.3 mm
LIMIT SWITCH	2 positions
ENCODER (*)	Incremental or Absolute
SELF-WEIGHT	123 kg
LOW VOLTAGE CONTROL	
CONTROL SUPPLY CONNECTOR	CEE 16A 4h 24VAC - 3PH + G black socket
LIMIT SWITCH	2 positions

(*) only on request

OTHER OPERATING VOLTAGE & FREQUENCY ARE AVAILABLE

EXE RISE

D8+ 2500kg

1 REEVE

EXTRA LARGE FRAME

GENERAL FEATURES

MODEL	EXE Rise chain hoist D8+ 2500kg
TYPE OF CONTROL	Direct or Low Voltage
FEM CLASS	3m
DUTY FACTOR	50%
START PER HOUR	300
BEARING TIME / 10 YEARS	12500h
FALLS OF CHAIN	1
TYPE OF CHAIN	DIN EN 818-7 - type DAT steel 80 grade Zinc galvanized or phosphated
SIZE OF CHAIN	13x36 mm
CHAIN SELF-WEIGHT	3.80 kg/m
SAFETY FACTOR	8:1
IP RATE	55
INSULATION CLASS (TEMPERATURE CLASS)	F according to CEI 15-26
LOAD WHEEL	5 pockets
NOISE LEVEL	67.5 dB @ full load
CONNECTION CABLE LENGHT	75 ± 5 cm

The EXE Rise D8+ 2500kg Extra Large Frame chain hoist have a FEM class rating of 3m and it's single reeved, maintaining an 8-to-1 safety factor. These hoists are ideal for some of the heaviest rigs such as line arrays, LED walls, scoreboards, complex mothergrids, and epic EDM festivals. If needed, these hoists can be manufactured with a double-reeved chain to double the load capacity for roof systems.

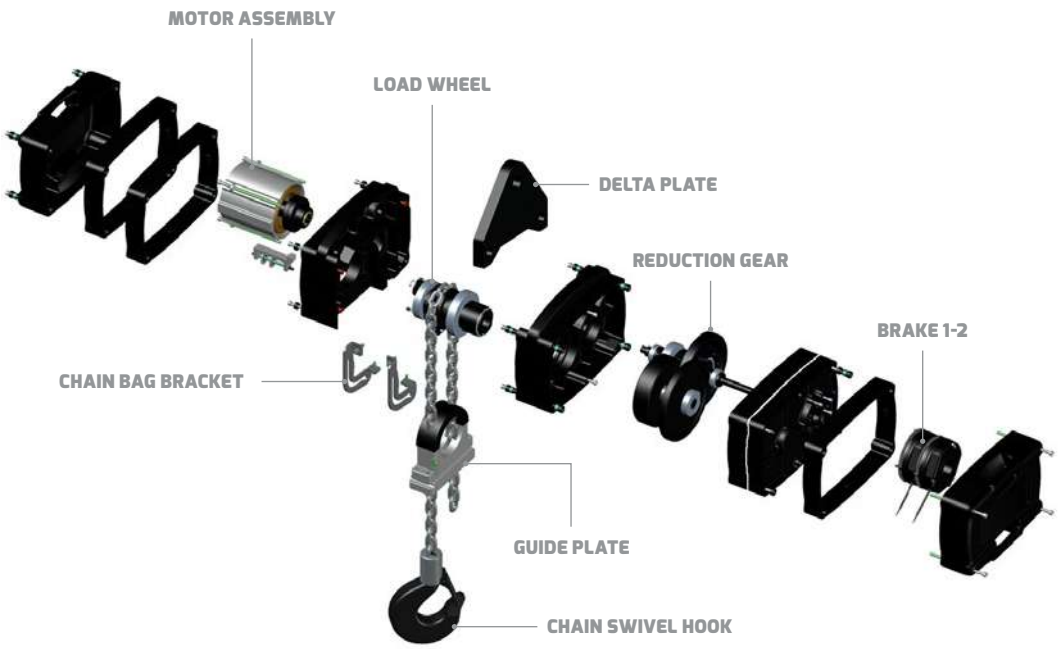

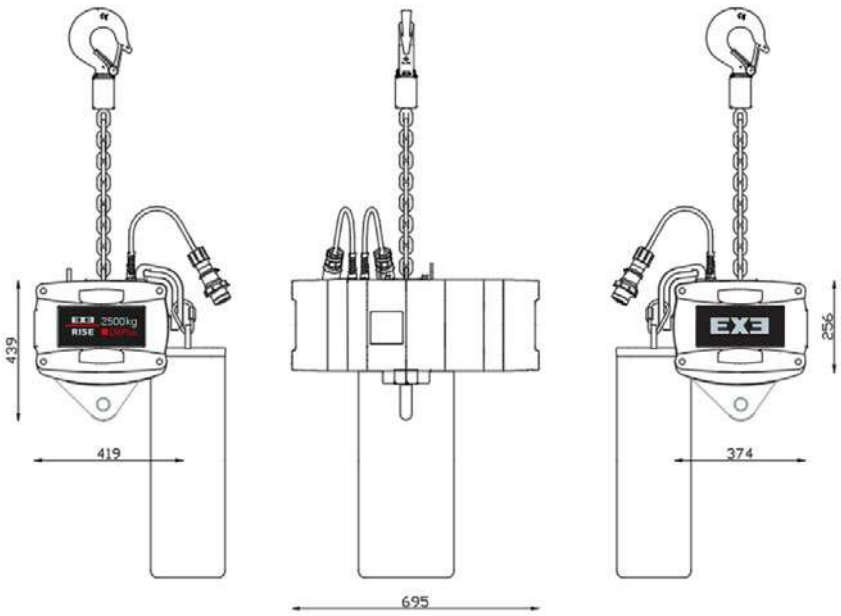

EXE RISE D8+ 2500kg

EXTRA LARGE FRAME

DIRECT CONTROL	
WORKING LOAD LIMIT	2500 kg
FREQUENCY	50 Hz
LIFTING SPEED	4m/min ± 1%
MOTOR POWER	2.5 kW
OPERATING VOLTAGE Δ/Y	230/400 VAC - 3 - 50 Hz
3PH CURRENT	Δ 12 A - Y7 A
Δ POWER SUPPLY CONNECTOR (*)	CEE 16A 9h 230VAC - 3PH + G plug
Y POWER SUPPLY CONNECTOR	CEE 16A 6h 400VAC - 3PH + G plug
REVOLUTIONS PER MINUTE	1400
NUMBER OF BRAKES	2
DC BRAKE SIZE	12
DC BRAKE POWER	40 W
DC BRAKE OPERATING VOLTAGE	103 VDC
DC BRAKE RATED TORQUE	32 Nm
DC BRAKE RATED TORQUE REDUCTION AT THE SPEED SPECIFICATION x %	81% (1500 r/min)
DC BRAKE GAP (SL)	0.3 mm
LIMIT SWITCH	2 positions
ENCODER (*)	Incremental or Absolute
SELF-WEIGHT	125 kg
LOW VOLTAGE CONTROL	
CONTROL SUPPLY CONNECTOR	CEE 16A 4h 24VAC - 3PH + G black socket
LIMIT SWITCH	2 positions

(*) only on request

OTHER OPERATING VOLTAGE & FREQUENCY ARE AVAILABLE

EXE RISE

D8+ 250kg
SINGLE PHASE

MEDIUM FRAME

230VAC

GENERAL FEATURES

MODEL	EXE Rise D8+ 250kg SINGLE PHASE
FEM CLASS	2m
DUTY FACTOR	40%
START PER HOUR	240
BEARING TIME / 10 YEARS	6300h
FALLS OF CHAIN	1
TYPE OF CHAIN	DIN EN 818-7 - type DAT steel 80 grade Zinc galvanized or phosphated
SIZE OF CHAIN	6x18 mm
CHAIN SELF-WEIGHT	0.78 kg/m
SAFETY FACTOR	8:1
IP RATE	55
INSULATION CLASS (TEMPERATURE CLASS)	F according to CEI 15-26
LOAD WHEEL	5 pockets
NOISE LEVEL	67.5 dB @ full load

EXE RISE D8+ 250kg
MEDIUM FRAME SINGLE PHASE

SINGLE PHASE	
WORKING LOAD LIMIT	250 kg
FREQUENCY	50 Hz
LIFTING SPEED	4m/min ± 1%
MOTOR POWER	0.8 kW
OPERATING VOLTAGE Δ	Δ 230 VAC - 1 - 50 Hz
1PH CURRENT	Δ 3.1 A
REVOLUTIONS PER MINUTE	1400
NUMBER OF BRAKES	2
DC BRAKE SIZE	06
DC BRAKE POWER	20 W
DC BRAKE OPERATING VOLTAGE	103 VDC
DC BRAKE RATED TORQUE	4 Nm
DC BRAKE RATED TORQUE REDUCTION AT THE SPEED SPECIFICATION x %	87% (1500 r/min)
DC BRAKE GAP (SL)	0.2 mm
SELF-WEIGHT	24 kg

*The values are reported in **mm**.*

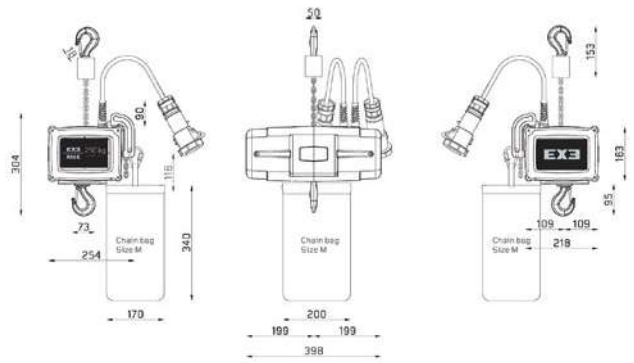

The EXE Rise D8+ 250kg SINGLE PHASE chain hoist designed around our medium size body, with a WLL of 250 kg. Ideal for many locations where 3 phase power might not be available.

EXE RISE

D8+ 500kg

SINGLE PHASE

MEDIUM FRAME

230VAC

GENERAL FEATURES

MODEL	D8+ 500kg SINGLE PHASE
FEM CLASS	2m
DUTY FACTOR	40%
START PER HOUR	240
BEARING TIME / 10 YEARS	6300h
FALLS OF CHAIN	1
TYPE OF CHAIN	DIN EN 818-7 - type DAT steel 80 grade Zinc galvanized or phosphated
SIZE OF CHAIN	6x18 mm
CHAIN SELF-WEIGHT	0.78 kg/m
SAFETY FACTOR	8:1
IP RATE	55
INSULATION CLASS (TEMPERATURE CLASS)	F according to CEI 15-26
LOAD WHEEL	5 pockets
NOISE LEVEL	67.5 dB @ full load

EXE RISE D8+ 500kg

MEDIUM FRAME WITH INVERTER SINGLE PHASE

SINGLE PHASE	
WORKING LOAD LIMIT	500 kg
FREQUENCY	50 Hz
LIFTING SPEED	4m/min ± 1%
MOTOR POWER	0.8 kW
OPERATING VOLTAGE Δ	Δ 230 VAC - 1 - 50 Hz
1PH CURRENT	Δ 6.0 A
REVOLUTIONS PER MINUTE	1400
NUMBER OF BRAKES	2
DC BRAKE SIZE	06
DC BRAKE POWER	20 W
DC BRAKE OPERATING VOLTAGE	103 VDC
DC BRAKE RATED TORQUE	4 Nm
DC BRAKE RATED TORQUE REDUCTION AT THE SPEED SPECIFICATION x %	87% (1500 r/min)
DC BRAKE GAP (SL)	0.2 mm
SELF-WEIGHT	27 kg

*The values are reported in **mm**.*

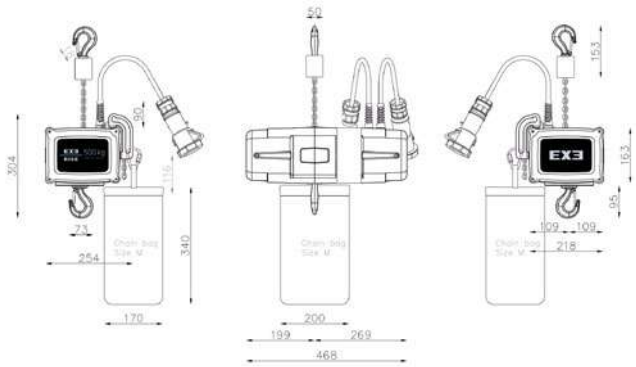

The EXE Rise D8+ 500kg SINGLE PHASE chain hoist designed around our medium size body, with inverter. WLL of 500 kg. Ideal for many locations where 3 phase power might not be available.

EX3 2000kg
RISE D8 Plus
EX3 1600kg
RISE D8 Plus
EX3 1000kg
RISE D8 Plus
EX3

EX3 500 kg
RISE D8 Plus
EX3 250 kg
RISE D8 Plus

EXE
ACE

02

EXE ACE D8
A NEW ERA OF CHAIN HOISTS PUT AN ACE IN YOUR HANDS

EXE Ace collection is for you if you're looking for a cost effective solution for one-off events or for installations that last weeks or months at a time.

Since these types of events don't require constant starts and stops day after day after day from the hoist, the **EXE Ace** collection has been designed for a lower duty cycle.

While **EXE Ace** hoists are all compliant with D8 requirements, we have been able to make them more lightweight by designing them to a standard 5-to-1 safety factor with a single brake unit, though a secondary brake is available as an add-on when ordering new **EXE Ace** hoists.

It's possible configure new **EXE Ace** hoists to comply with your country's mains power supply and can provide either direct or low voltage control.

These hoists pair very well with the **EXE Drive** 4 or 8 channel Basic Controllers.

Overview

EXE ACE D8 FIXED SPEED CHAIN HOISTS			
MEDIUM FRAME ULTRA COMPACT	MEDIUM FRAME COMPACT	MEDIUM FRAME	EXTRA LARGE FRAME COMPACT
250kg	500kg	1000kg	2000kg
DIRECT CONTROL			
LOW VOLTAGE CONTROL			

EXE ACE

▲D8 250kg

MEDIUM FRAME ULTRA COMPACT

GENERAL FEATURES

MODEL	EXE Ace chain hoist D8 250kg DC
TYPE OF CONTROL	Direct Voltage
FEM CLASS	2m
DUTY FACTOR	25%
START PER HOUR	150
BEARING TIME / 10 YEARS	1600 h
FALLS OF CHAIN	1
TYPE OF CHAIN	DIN EN 818-7 - type DAT steel 80 grade Zinc galvanized or phosphated
SIZE OF CHAIN	5x15 mm
CHAIN SELF-WEIGHT	0.54 kg/m
SAFETY FACTOR	8:1
IP RATE	55
INSULATION CLASS (TEMPERATURE CLASS)	F according to CEI 15-26
LOAD WHEEL	5 pockets
NOISE LEVEL	67.5 dB @ full load
CONNECTION CABLE LENGHT	75 ± 5 cm

The EXE Ace D8 250kg Medium Frame Ultra Compact chain hoist is made from extremely light cast aluminum. Its low profile frame makes it ideal for squeezing into small spaces and achieving the greatest possible headroom in low-ceiling venues. This lightweight, compact hoist is ideal for wedding receptions, corporate event venues, and for simple rigs in educational, religious or theatrical settings.

EXE ACE D8 250kg

MEDIUM FRAME ULTRA COMPACT

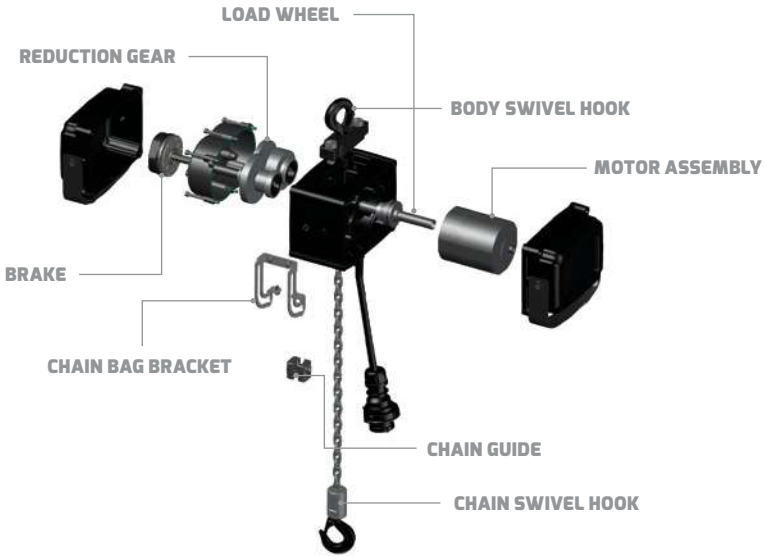

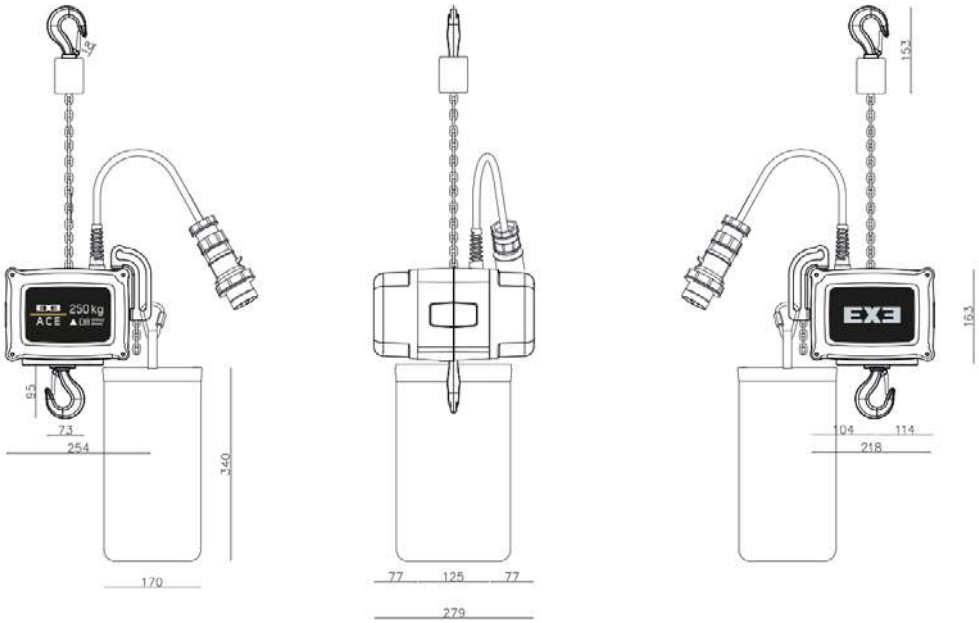

*The values are reported in **mm.***

DIRECT CONTROL	
WORKING LOAD LIMIT	250 kg
FREQUENCY	50 Hz
LIFTING SPEED	4m/min ± 1%
MOTOR POWER	0.36 kW
OPERATING VOLTAGE Δ/Y	230/400 VAC - 3 - 50 Hz
3PH CURRENT	Δ 1.84 A - Y 1.06 A
Δ POWER SUPPLY CONNECTOR (*)	CEE 16A 9h 230VAC - 3PH + G plug
Y POWER SUPPLY CONNECTOR	CEE 16A 6h 400VAC - 3PH + G plug
REVOLUTIONS PER MINUTE	1400
NUMBER OF BRAKES	1
DC BRAKE SIZE	06
DC BRAKE POWER	20 W
DC BRAKE OPERATING VOLTAGE	103 VDC
DC BRAKE RATED TORQUE	4 Nm
DC BRAKE GAP (SL)	0.2 mm
SELF-WEIGHT	19.5 kg

D8 198KG MODEL ALSO AVAILABLE

FOR OTHER OPERATING VOLTAGE & FREQUENCY CONTACT EXE OFFICE

EXE ACE

▲D8 500kg

MEDIUM FRAME COMPACT

GENERAL FEATURES

MODEL	EXE Ace chain hoist D8 500kg DC / LVC
TYPE OF CONTROL	Direct Voltage or Low Voltage
FEM CLASS	1Bm
DUTY FACTOR	25%
START PER HOUR	150
BEARING TIME / 10 YEARS	1600 h
FALLS OF CHAIN	1
TYPE OF CHAIN	DIN EN 818-7 - type DAT steel 80 grade Zinc galvanized or phosphated
SIZE OF CHAIN	5x15 mm
CHAIN SELF-WEIGHT	0.54 kg/m
SAFETY FACTOR	5:1
IP RATE	55
INSULATION CLASS (TEMPERATURE CLASS)	F according to CEI 15-26
LOAD WHEEL	5 pockets
NOISE LEVEL	67.5 dB @ full load
CONNECTION CABLE LENGHT	75 ± 5 cm

The EXE Ace D8 500kg Medium Frame Compact chain hoist is extremely light due to its small body made from cast aluminium. Handling and lifting of the chain hoist is facilitated by handles that work in either operational orientation. The possibility of using the chain hoist in both Standard and Self Climbing positions, combined with its swivel or fixed hook feature, increase practicality and versatility.

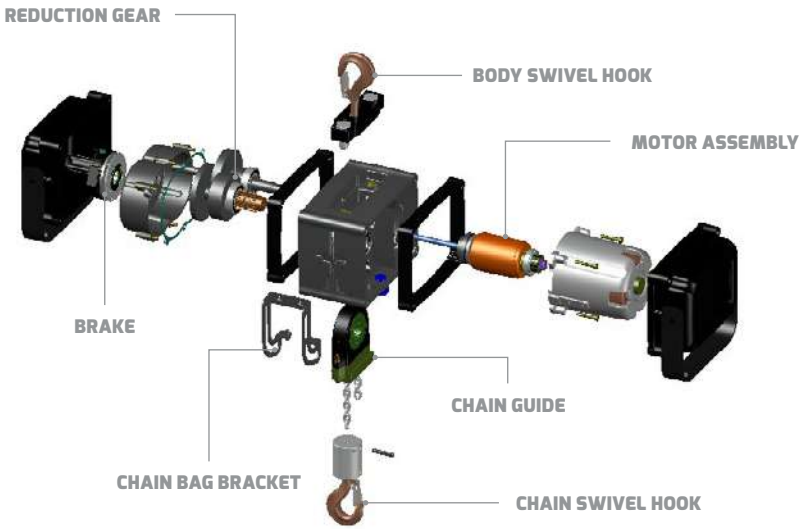

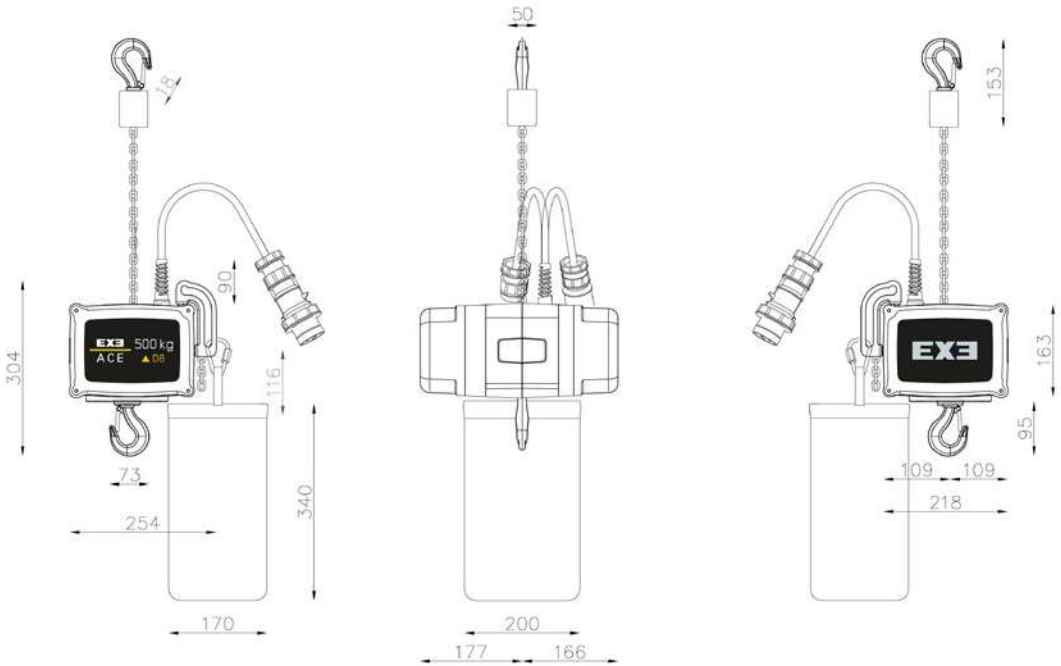

*The values are reported in **mm. DC** model has one cable and brake side ring absent*

EXE ACE D8 500kg

MEDIUM FRAME COMPACT

DIRECT CONTROL	
WORKING LOAD LIMIT	500 kg
FREQUENCY	50 Hz
LIFTING SPEED	4m/min ± 1%
MOTOR POWER	0.5 kW
OPERATING VOLTAGE Δ/Y	230/400 VAC - 3 - 50 Hz
3PH CURRENT	Δ 2.70 A - Y 1.56 A
Δ POWER SUPPLY CONNECTOR (*)	CEE 16A 9h 230VAC - 3PH + G plug
Y POWER SUPPLY CONNECTOR	CEE 16A 6h 400VAC - 3PH + G plug
REVOLUTIONS PER MINUTE	1400
NUMBER OF BRAKES	1
DC BRAKE SIZE	06
DC BRAKE POWER	20 W
DC BRAKE OPERATING VOLTAGE	104 VDC
DC BRAKE RATED TORQUE	4 Nm
DC BRAKE GAP (SL)	0.2 mm
LIMIT SWITCH*	2 Position
ENCODER*	On request
SELF-WEIGHT	21.5 kg
LOW VOLTAGE CONTROL	
CONTROL SUPPLY CONNECTOR	CEE 16A 9h 230VAC - 3PH + G black socket

(*) only on request

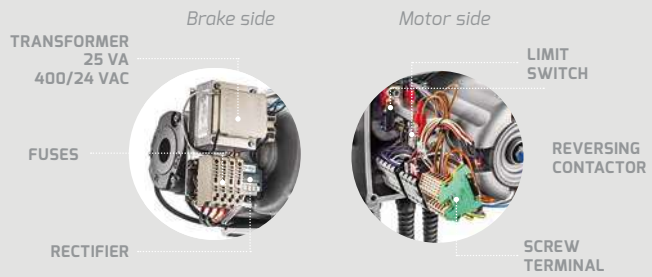

FOR OTHER OPERATING VOLTAGE & FREQUENCY CONTACT EXE OFFICE

EXE ACE

▲D8 1000kg

MEDIUM FRAME

GENERAL FEATURES

MODEL	EXE Ace chain hoist D8 1000kg DC / LVC
TYPE OF CONTROL	Direct Voltage or Low Voltage
FEM CLASS	1Bm
DUTY FACTOR	25%
START PER HOUR	150
BEARING TIME / 10 YEARS	1600 h
FALLS OF CHAIN	1
TYPE OF CHAIN	DIN EN 818-7 - type DAT steel 80 grade Zinc galvanized or phosphated
SIZE OF CHAIN	6.3x19 mm
CHAIN SELF-WEIGHT	0.86 kg/m
SAFETY FACTOR	5:1
IP RATE	55
INSULATION CLASS (TEMPERATURE CLASS)	F according to CEI 15-26
LOAD WHEEL	5 pockets
NOISE LEVEL	67.5 dB @ full load
CONNECTION CABLE LENGHT	75 ± 5 cm

The EXE Ace D8 1000kg Medium Frame chain hoist is extremely compact and corrosion resistant due to the innovative body carefully designed to reduce size and weight. Handling and lifting of the chain hoist is facilitated by handles that work in either operational orientation. The possibility of using the chain hoist in both Standard and Self Climbing positions, combined with its swivel or fixed hook feature, increase practicality and versatility. The clutch is located on the motor shaft, in front of the motor assembly, which positions it outside of the load path.

EXE ACE D8 1000kg

MEDIUM FRAME

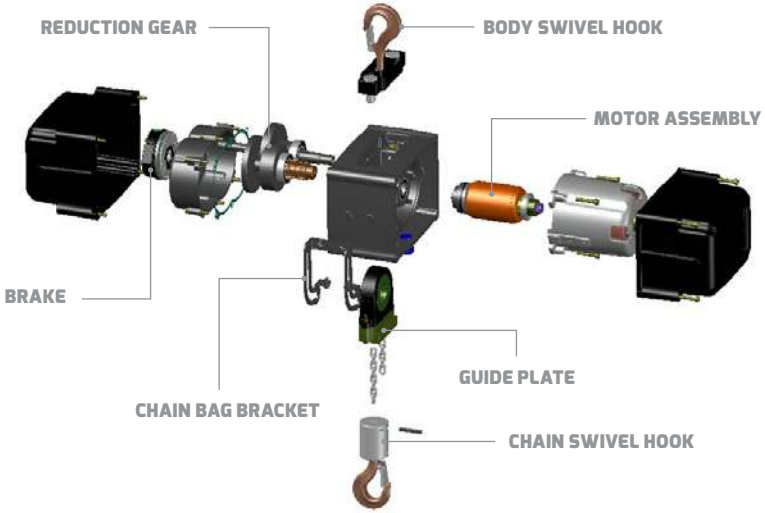

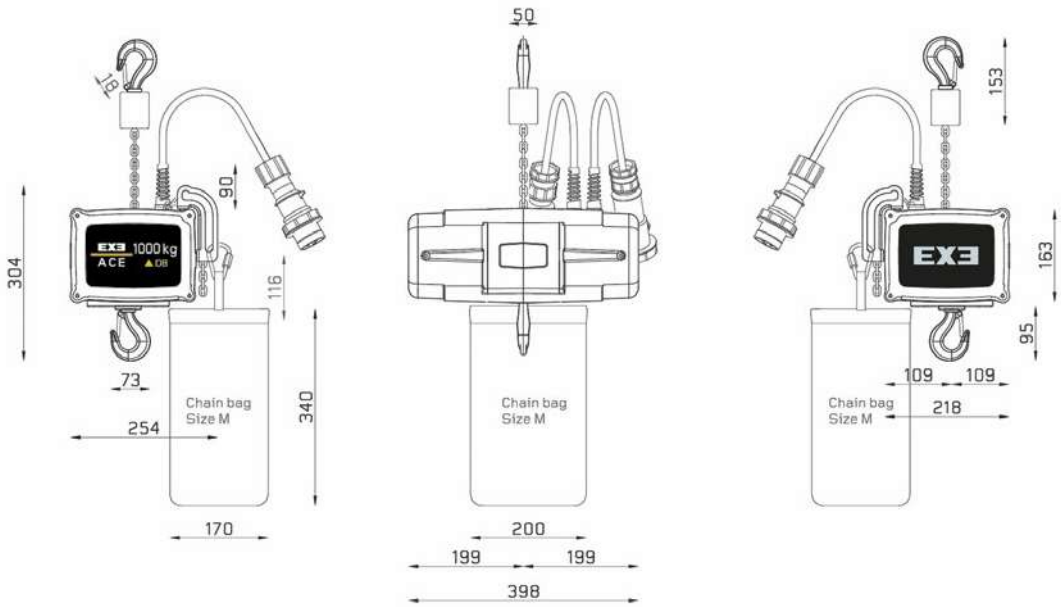

*The values are reported in **mm. DC** model has one cable*

DIRECT CONTROL	
WORKING LOAD LIMIT	1000 kg
FREQUENCY	50 Hz
LIFTING SPEED	4m/min ± 1%
MOTOR POWER	1.0 kW
OPERATING VOLTAGE Δ/Y	230/400 VAC - 3 - 50 Hz
3PH CURRENT	Δ 4.62 A - Y 2.67 A
Δ POWER SUPPLY CONNECTOR (*)	CEE 16A 9h 230VAC - 3PH + G plug
Y POWER SUPPLY CONNECTOR	CEE 16A 6h 400VAC - 3PH + G plug
REVOLUTIONS PER MINUTE	1400
NUMBER OF BRAKES	1
DC BRAKE SIZE	08
DC BRAKE POWER	25 W
DC BRAKE OPERATING VOLTAGE	104 VDC
DC BRAKE RATED TORQUE	8 Nm
DC BRAKE GAP (SL)	0.2 mm
LIMIT SWITCH*	2 Position
ENCODER*	On request
SELF-WEIGHT	24 kg
LOW VOLTAGE CONTROL	
CONTROL SUPPLY CONNECTOR	CEE 16A 4h 24VAC - 3PH + G black socket

(*) only on request

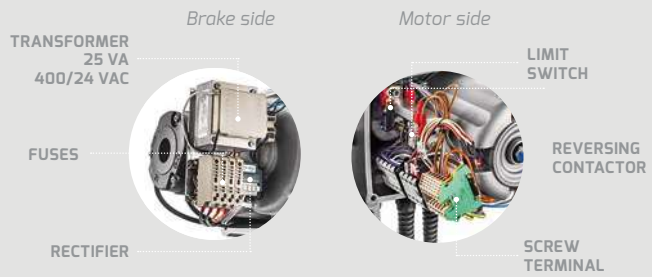

FOR OTHER OPERATING VOLTAGE & FREQUENCY CONTACT EXE OFFICE

EXE ACE

▲D8 2000kg

EXTRA LARGE FRAME COMPACT

GENERAL FEATURES

MODEL	EXE Ace chain hoist D8 2000kg DC / LVC
TYPE OF CONTROL	Direct Voltage or Low Voltage
FEM CLASS	1Bm
DUTY FACTOR	25%
START PER HOUR	150
BEARING TIME / 10 YEARS	1600 h
FALLS OF CHAIN	1
TYPE OF CHAIN	DIN EN 818-7 - type DAT steel 80 grade Zinc galvanized or phosphated
SIZE OF CHAIN	10x28 mm
CHAIN SELF-WEIGHT	2.24 kg/m
SAFETY FACTOR	5:1
IP RATE	55
INSULATION CLASS (TEMPERATURE CLASS)	F according to CEI 15-26
LOAD WHEEL	5 pockets
NOISE LEVEL	67.5 dB @ full load
CONNECTION CABLE LENGHT	75 ± 5 cm

The EXE Ace D8 2000kg Extra Large Frame Compact chain hoist is extremely compact and corrosion resistant due to the innovative body carefully designed to reduce size and weight. Handling and lifting of the chain hoist is facilitated by handles that work in either operational orientation. The possibility of using the chain hoist in both Standard and Self Climbing positions, combined with its swivel or fixed hook feature, increase practicality and versatility. The clutch is located on the motor shaft, in front of the motor assembly, which positions it outside of the load path.

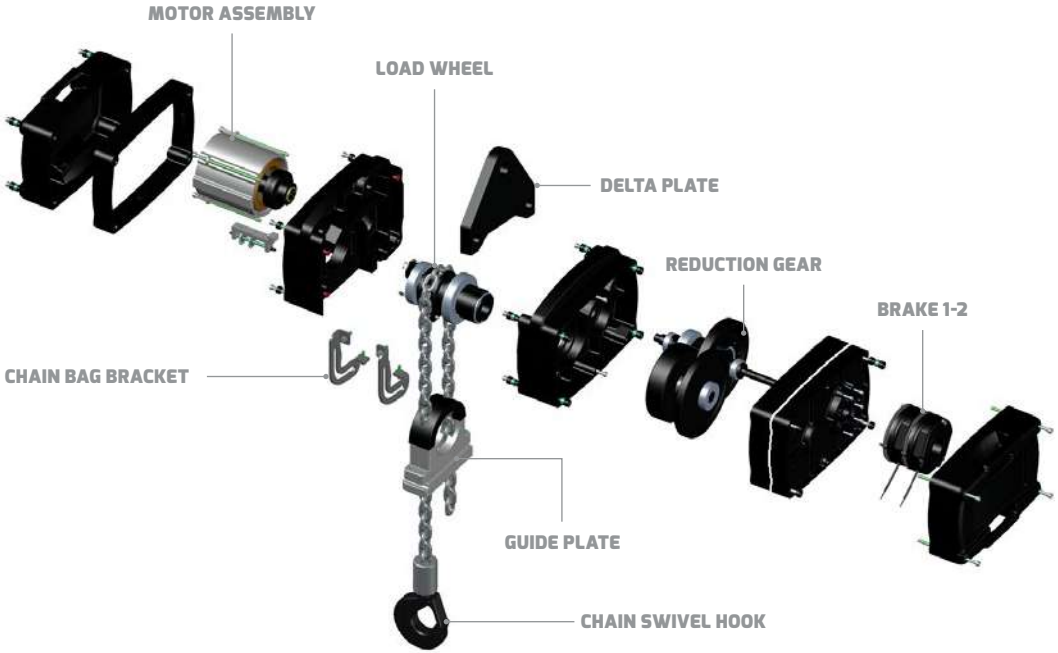

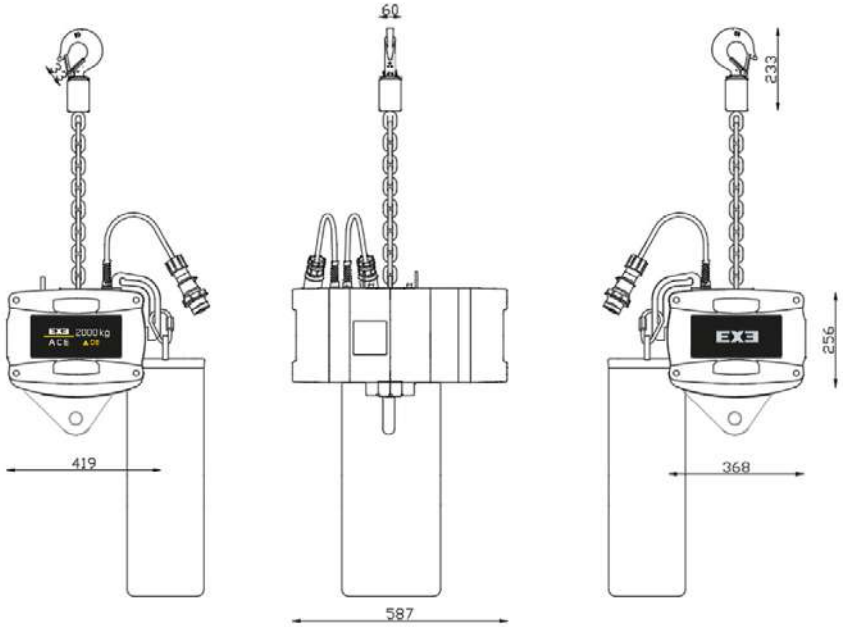

*The values are reported in **mm. DC** model has one cable*

EXE ACE D8 2000kg

EXTRA LARGE FRAME COMPACT

DIRECT CONTROL	
WORKING LOAD LIMIT	2000 kg
FREQUENCY	50 Hz
LIFTING SPEED	4m/min ± 1%
MOTOR POWER	2.0 kW
OPERATING VOLTAGE Δ/Y	230/400 VAC - 3 - 50 Hz
3PH CURRENT	Δ 9.9 A - Y 5.7 A
Δ POWER SUPPLY CONNECTOR (*)	CEE 16A 9h 230VAC - 3PH + G plug
Y POWER SUPPLY CONNECTOR	CEE 16A 6h 400VAC - 3PH + G plug
REVOLUTIONS PER MINUTE	1400
NUMBER OF BRAKES	2
DC BRAKE SIZE	10
DC BRAKE POWER	30 W
DC BRAKE OPERATING VOLTAGE	104 VDC
DC BRAKE RATED TORQUE	16 Nm
DC BRAKE GAP (SL)	0.25 mm
LIMIT SWITCH*	2 Position
ENCODER*	On request
SELF-WEIGHT	110 kg
LOW VOLTAGE CONTROL	
CONTROL SUPPLY CONNECTOR	CEE 16A 4h 24VAC - 3PH + G black socket

(*) only on request

FOR OTHER OPERATING VOLTAGE & FREQUENCY CONTACT EXE OFFICE

EX3 2000kg
ACE ▲D8
EX3
EX3 1000kg
ACE ▲D8
EX3

EX3
500kg
ACE
D8
EX3
DRIVE
EX3

03

EXE VARIO

EXE VARIO
VARIABLE SPEED CHAIN HOISTS

Suitable for body-up and body-down (self-climbing or standard suspension), without the need for any adjustments modifications.

The EXE Vario is based around the existing large frame EXE Rise and has been converted for use with the popular Kinesys Elevation 1+ controller. Development was carried out in close collaboration with the team at Kinesys Projects Ltd.

All variable speed chain hoists are supplied ready for use. Every hoist is fitted with double brakes, four position limit switches and encoders as standard. The available models has a lifting capacity of 500kg and 1000kg with a 8x24 mm chain. The EXE Vario has the ability to ramp start, ramp stop, program preset positions and vary the speed of the chain hoist for maximum creative effect.

When it comes to control, the EXE Vario chain hoist is compatible with Kinesys Vector and K2 control platforms, which are "tour-proven" and universally recognised as the industry standard.

The EXE Vario chain hoist can also be used as a fixed speed hoist by adding an adapter cable, which allows connection to a standard controller. It can also be provided without Kinesys conversion for custom wiring installations.

Overview

EXE VARIO D8+ 500kg		EXE VARIO D8+ 1000kg	
MAX LIFTING SPEED:	20m/min @50Hz 24m/min @60Hz	MAX LIFTING SPEED:	10m/min @50Hz 12m/min @60Hz

VARIABLE SPEED CHAIN HOIST CONFIGURATION

Wiring diagram for a generic EXE Vario hoist configuration

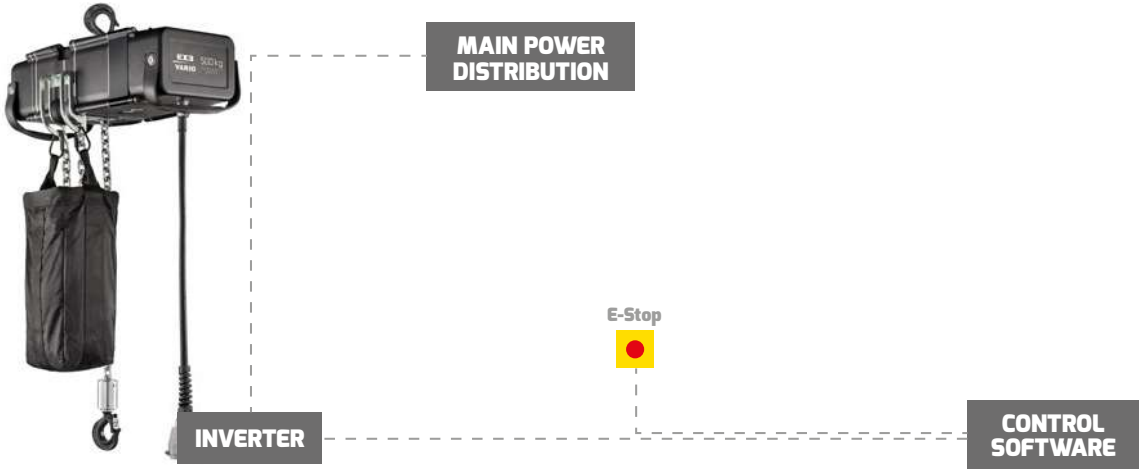

EXE VARIO

D8+ 500kg

VARIABLE SPEED

GENERAL FEATURES

MODEL	D8+ 500kg VARIABLE SPEED
FEM CLASS	1Bm
TYPE OF CHAIN	DIN EN 818-7 - type DAT steel 80 grade Zinc galvanized or phosphated
SIZE OF CHAIN	8x24 mm
CHAIN SELF-WEIGHT	1.39 kg/m
SAFETY FACTOR	8:1
IP RATE	55
INSULATION CLASS (TEMPERATURE CLASS)	F according to CEI 15-26
LOAD WHEEL	5 pockets
NOISE LEVEL	67.5 dB @ full load
CONNECTION CABLE LENGHT	165 ± 5 cm

EXE VARIO D8+ 500kg

VARIABLE SPEED	
WORKING LOAD LIMIT	500 kg
FREQUENCY - MAX LIFTING SPEED	50 Hz: max 20 m/min 60 Hz: max 24 m/min
MOTOR POWER	2.2 kW
OPERATING VOLTAGE	Y 400 VAC - 3 - 50 Hz
3PH CURRENT	Y 5.5 A
REVOLUTIONS PER MINUTE	2800
NUMBER OF BRAKES	2
DC BRAKE SIZE	10
DC BRAKE POWER	30 W
DC BRAKE OPERATING VOLTAGE	205 VDC
DC BRAKE RATED TORQUE	16 Nm
DC BRAKE RATED TORQUE REDUCTION AT THE SPEED SPECIFICATION x %	76% (3000 r/min)
DC BRAKE GAP (SL)	0.2 mm
SELF-WEIGHT	50 kg

*The values are reported in **mm.***

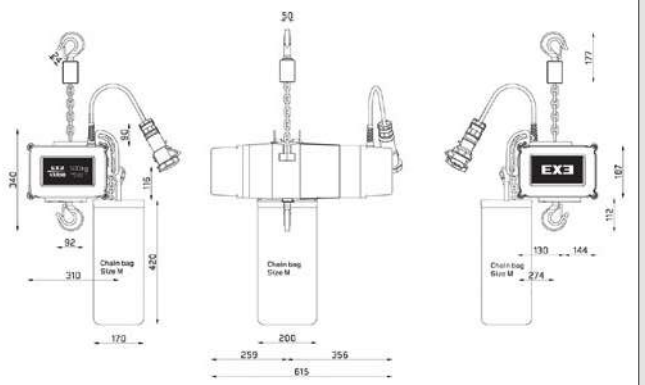

EXE Vario Chain Hoist D8+ 500kg

EXE Vario is a variable speed chain hoist converted for use with the Kinesys Control System

EXE VARIO

D8+ 1000kg

VARIABLE SPEED

GENERAL FEATURES

MODEL	D8+ 1000kg VARIABLE SPEED
FEM CLASS	1Bm
TYPE OF CHAIN	DIN EN 818-7 - type DAT steel 80 grade Zinc galvanized or phosphated
SIZE OF CHAIN	8x24 mm
CHAIN SELF-WEIGHT	1.39 kg/m
SAFETY FACTOR	8:1
IP RATE	55
INSULATION CLASS (TEMPERATURE CLASS)	F according to CEI 15-26
LOAD WHEEL	5 pockets
NOISE LEVEL	67.5 dB @ full load
CONNECTION CABLE LENGHT	165 ± 5 cm

EXE Vario Chain Hoist D8+ 1000kg

EXE Vario is a variable speed chain hoist converted for use with the Kinesys Control System

EXE VARIO D8+ 1000kg

VARIABLE SPEED	
WORKING LOAD LIMIT	1000 kg
FREQUENCY - MAX LIFTING SPEED	50 Hz: max 10 m/min 60 Hz: max 12 m/min
MOTOR POWER	2.2 kW
OPERATING VOLTAGE	Y 400 VAC - 3 - 50 Hz
3PH CURRENT	Y 5.5 A
REVOLUTIONS PER MINUTE	2800
NUMBER OF BRAKES	2
DC BRAKE SIZE	10
DC BRAKE POWER	30 W
DC BRAKE OPERATING VOLTAGE	205 VDC
DC BRAKE RATED TORQUE	16 Nm
DC BRAKE RATED TORQUE REDUCTION AT THE SPEED SPECIFICATION x %	76% (3000 r/min)
DC BRAKE GAP (SL)	0.2 mm
SELF-WEIGHT	52 kg

*The values are reported in **mm**.*

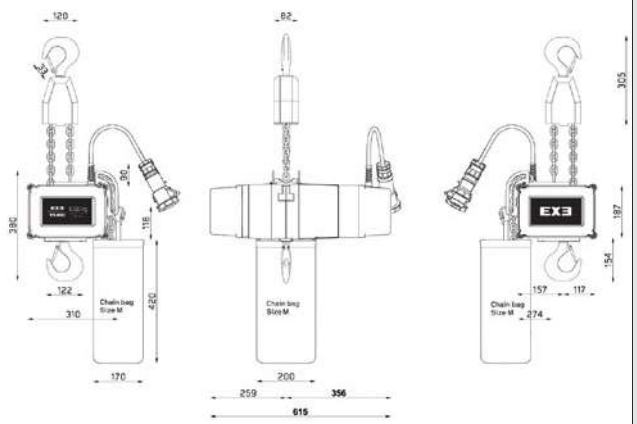

04

THE COMPLETE LIST OF
OF EXE TECHNOLOGY ACCESSORIES

Discover the range of accessories compatible with your EXE chain hoists and the new EXE Technology Safety Helmet: in this section you will find all the accessories and upgrades for your products.

HELMET

SAFETY HELMET
FOR INDUSTRIAL USE

KEY FEATURES	
CERTIFICATION:	EN 397
CODE	GRAY: LT SHARMG-E01P BLACK: LT SHARMK-E01P
SIZE:	53-63 cm adjustable
WEIGHT:	430g
MATERIAL:	PP - polypropylene

FRONT VIEW

BACK VIEW

FRONT VIEW

BACK VIEW

ACCESSORIES

FLIGHT CASE

Flight cases are extremely robust with protection against bumps and vibration.
Parts are assembled using aluminum bordering, handles, closures and casing, with fixed wheels and trans pallet supports. Flight cases are fireproof and waterproof.

SIZE	1X M	2X M	L
A4I Code	XRFMFC1N	XRFMFC2N	XRFLF1N
Dimensions B1xB2xH (cm)	74x57x58 cm	74x57x58 cm	74x57x58 cm
Dimensions B1xB2xH (inch)	29.1x22.4x22.8 inch	29.1x22.4x22.8 inch	29.1x22.4x22.8 inch
Quantity of Hoist	1	2	1
Exe Rise Hoists Compatibility	MEDIUM FRAME ULTRA MEDIUM FRAME COMPACT MEDIUM FRAME	MEDIUM FRAME ULTRA MEDIUM FRAME COMPACT MEDIUM FRAME	LARGE FRAME

1x M

XRFMFC1N

2x M

XRFMFC2N

XRFLF1N

ACCESSORIES

FLIGHT CASE

Flight cases are extremely robust with protection against bumps and vibration.
Parts are assembled using aluminum bordering, handles, closures and casing, with fixed wheels and trans pallet supports. Flight cases are fireproof and waterproof.

SIZE	XLA	XLB	XLC
A4I Code	XRFXF1NA	XRFXF1NB	XRFXF1NC
Dimensions B1xB2xH (cm)	85x65x82 cm	113x80x73 cm	80x80x73 cm
Dimensions B1xB2xH (inch)	35.5x25.6x32.3 inch	44.5x31.5x28.7 inch	31.5x31.5x28.7 inch
Quantity of Hoist	1	1	1
Exe Rise Hoists Compatibility	EXTRA LARGE FRAME	EXTRA LARGE FRAME	EXTRA LARGE FRAME

XRFXF1NB

XRFXF1NC

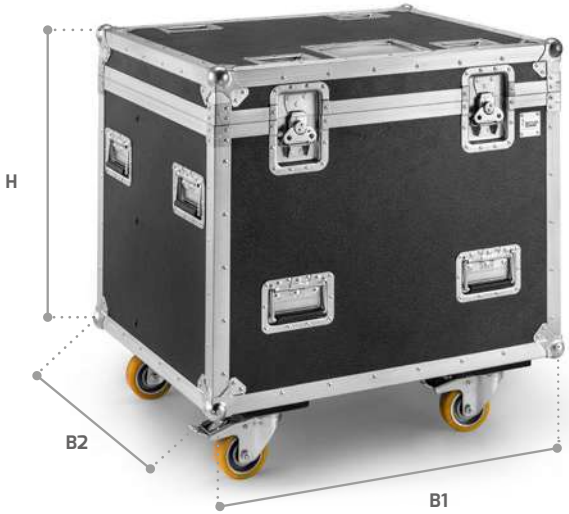

XRFXF1NA

CHAIN BAG

Chain Bag used for EXE Rise is in Polyvinyl chloride coated polyamide 65% PVC (Nylon 840), 35% Polyamide. There are many sizes from S up to XXXL, depending on the size and leght of the chain

Size	S-	S	M	L
A4I Code	CBH059	CHB024	CHB025	CHB026
External Dimensions (cm) = AxB	20x17	20x17	20x17	20x17
Height (cm) = C	17	34	42	58
Self-Weight (kg)	≈ 1.00	≈ 1.00	≈ 1.00	≈ 1.00

Size	L+	XL	XXL	XXXL
A4I Code	CHB051	CHB028	CHB056	CHB056
External Dimensions (cm) = AxB	27x21	27x21	20x25/20x40	20x20/20x40
Height (cm) = C	55	65	80	115
Self-Weight (kg)	≈ 0.75	≈ 1.00	≈ 1.50	≈ 10

Capacity @ 75%

Ø	S-	S	M	L	L+	XL	XXL	XXXL
5-6 mm	12m	25m	45m	65m	X	X	X	X
7-8 mm	X	12m	25m	40m	55m	70m	X	X
10 - 11.3 mm	X	X	X	X	20m	30m	50m	80m
13 mm	X	X	X	X	X	X	40m	55m

ACCESSORIES

RAIN COVER

STANDARD (UP) POSITION:
Protection from solids and liquids element for EXE Rise chain hoist in OFF mode during seasonal and permanent installations. EXE Technology cover can be used in the motor-up position and fit easily over the top of the motor to form a impermeable barrier.

Size	S	M	L
A4I Code	CHHSBK	CHHMBK	CHHLBK
Commercial Name	Black Cover Small	Black Cover Medium	Black Cover Large
Chain Hoist Compatible	SMALL FRAME	MEDIUM FRAME MEDIUM FRAME COMPACT	LARGE FRAME 1 FALL

CLIMBING (DOWN) POSITION:
Protection from solids and liquids element for EXE Rise chain hoist in OFF mode during seasonal and permanent installations. EXE Technology cover can be used in the motor-down position and fit easily over the top of the motor to form an impermeable barrier.

Size	M	L	L	XL
A4I Code	CHHRCM	CHHRCL	CHHRCLD	CHHRCX
Commercial Name	Black Rain Cover Medium	Black Rain Cover Large	Black Rain Cover Large	Black Rain Cover Extra Large
Chain Hoist Compatible	MEDIUM FRAME	LARGE FRAME 1 FALL	LARGE FRAME 2 FALL	EXTRA LARGE FRAME 1 FALL

Universal Double Reeve Pulley

Universal Double Reeve Pulley Medium and Large.
It allows to double the load capacity while halving the speed.

NAME	CODE	WLL	TO BE USED WITH CHAIN SIZE:
Universal Double Reeve Pulley **Medium**	LT XRC-IW01	max 1000kg	5x15 mm 6x18 mm 6.3x19 mm
Universal Double Reeve Pulley **Large**	LT XRC-IW02	max 2000kg	7x22 mm 7.1x20.5 mm 8x24 mm

Chain Testing Gauge

As the owner of a hoist, you are required to continuously monitor the wear and tear on your hoist chain in accordance with DIN 685 T5 or ISO 7592. A chain may have reached its service life end due to wear of its single or multiple link pitch attachments; wear of the wire diameter, and/or plastic deformation of its chain links due to overloading.

EXE limit gauge consists of on aluminium strip with guide holes for the measuring pins as well as locking holes for the locking studs attached to the measuring pin.

The two galvanised measuring pins provided with locking studs are located, together with the limit gauge, in a high quality softshell bag.

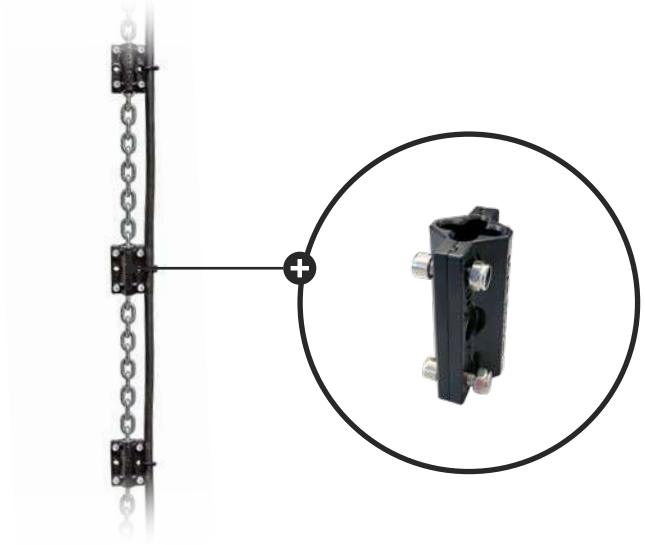

Chain Slider

Dual 9mm cable attachment points. Can be fitted on a load-bearing chain. Made out of low friction black Polyoxymthylene (POM). Four stainless M6 Hex bolts and Nylocks included. The shackle is not included.

Size	S	M	L
A4I Code	RGCSSD	RGCSMD	RGCSLG
Commercial Name	Chain Slider Small	Chain Slider Medium	Chain Slider Large
Chain Compatible	4x12 mm 5x15 mm	6x18 mm 6.3x19 mm 7x22 mm	8x24 mm

Touring Slider

The touring slider is designed for cable management in entertainment rigging system. It is made in one piece with two fixing points for cable such as power, control, data or audio cables to get attached. No tool is required whilst putting chain slider in the chain.

Size	S	M	L	XL
A4I Code	RGCSTSM	RGCSTMD	RGCSTLG	RGCSTXL
Commercial Name	Chain Slider Small	Chain Slider Medium	Chain Slider Large	Chain Slider Extra Large
Chain Compatible	4x12mm 5x15mm	6x18mm 6.3x19 mm 7x22mm	8x24mm	10x28mm 11.3x31mm 13x36mm

Self Locking Swivel Hooks

The self locking swivel hooks are extremely safe because of the self closing latch and the way the hook is constructed prevents the hook from opening when under load. (Available in black and red color)

Size	S	M	L
Commercial Name	Latch Lock Hook Small	Latch Lock Hook Medium	Latch Lock Hook Large
Chain Hoist Compatible	MEDIUM FRAME ULTRA COMPACT MEDIUM FRAME COMPACT MEDIUM FRAME	LARGE FRAME 1 REEVE	EXTRA LARGE FRAME 1 REEVE

Lifting Lug Bracket

The fixed body hook is the alternative to the swivel one when the latter is not suitable for your installation.

A4i Code: LLB 2000			
Chain Hoist Compatibility	Medium Frame Ultra Compact Medium Frame Compact	Medium Frame	Large Frame

Encoder

INCREMENTAL ENCODER

Most of the incremental encoders produce square waves signals but also sinusoidal signals and can provide travel, position, displacement and velocity information; positional information is relative, this means that it is possible to know both if the axis is rotating and if it is rotating clockwise or counterclockwise; but it is not possible to gather information about the absolute position of the axis.
For this reason the homing operation is always required at the beginning of the process to determine the absolute position of the system (detection of the reference point or zero point). Information is expressed in pulses per revolution (PPR).

ABSOLUTE ENCODER

An absolute encoder is designed to output the absolute position information; it has a unique code pattern, thus it can provide a unique digital code for each angular position of the axis. The main feature is that it is always possible to know exactly the position of the axis.
For instance, if you turn off the power supply and move the encoder shaft or the device, then at power on the absolute encoder will output the current position of the axis precisely. This means that no homing operation is required to determine the absolute position.

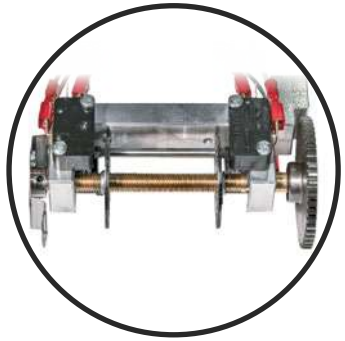

Limit Switch - Direct Control

More assured using EXE Rise chain hoists with the latest innovative component, the EXE DC Limit Switch Control Module.
The new accessory provides a higher level of safety and protection for our medium and large frame chain hoists, combining features from LVC chain hoists and high-specification motor-controllers.
Key features:
- Missing phase detection monitoring
- Automatic power supply sequence recognition
- DC Chain Hoist with limit switch
- Only one cable required to each DC hoist
- Directly compatible with EXE Drive DC Controller

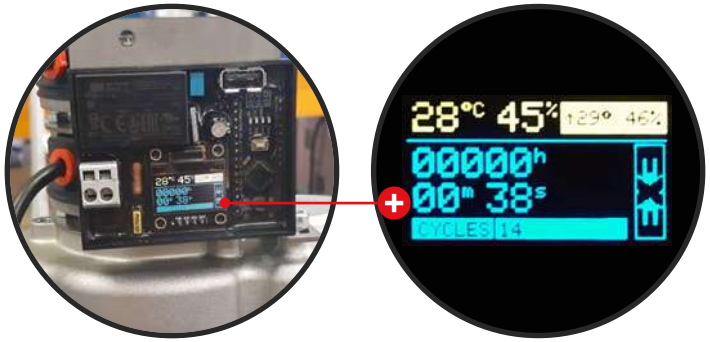

Data Logger

The EXE Data Logger is an innovative device records the real time and lifetime hours, minutes, and seconds of operation, start cycles, real time temperature and relative humidity values as well as the peak temperature and humidity values.
No batteries required. The Data Logger uses the same power source as the hoist circuit and is activated when the hoist is running, and the information is stored within the onboard RAM. The EXE Data Logger can be retrofitted to your existing EXE Technology inventory

EXE HCB

05

EXE HCB - HAND CHAIN BLOCK
LIGHTWEIGHT, NOT POWERED & EASY TO CARRY

The EXE HCB Hand Chain Block is the new family of products, designed to lift loads where it is not possibile to use electric chain hoists. The EXE HCB Hand Chain Blocks are compact in size and very light, making it easy to transport and handle. It's operated by hand and is widely used for lifting heavy loads without needing the power supply.

Available with 1000kg capacity with 18 meters of chain. The EXE HCB not only has reasonable structural design, high performance strenght, but also has the advantages of safety, reliability, easy maintenance and durability.

HCB 1000kg

HAND CHAIN BLOCK

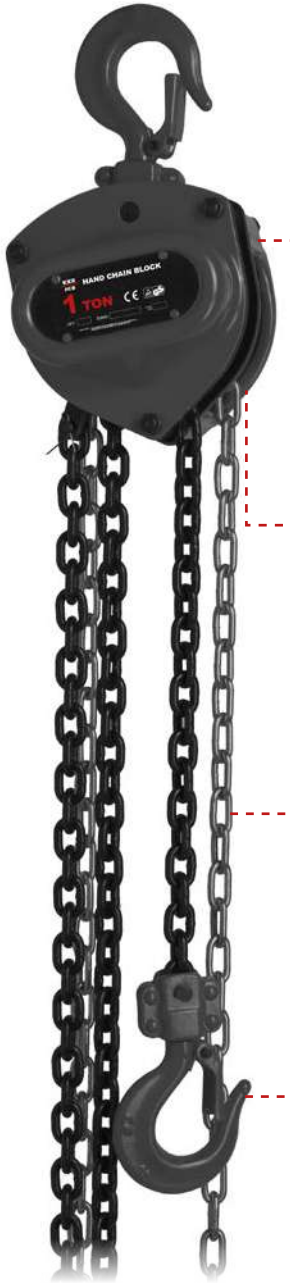

BLACK CHASSIS

LOAD WHEEL

CHAIN

CHAIN HOOK

EXE HCB 1000kg HAND CHAIN BLOCK

GENERAL FEATURES

MODEL	EXE HCB Hand Chain Block 1000kg
TYPE	Manual hoist
WLL	1000kg
LOAD CHAIN SIZE	6x18mm
LOAD CHAIN LENGHT	18m
HAND CHAIN LENGHT	36m
BODY COLOUR	Black

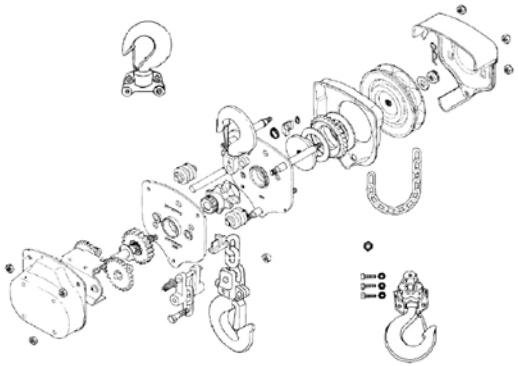

06

EXE IBEAM
BEAM TROLLEY SYSTEM

The EXE iBeam Trolleys are a mobile anchorage point that can be fitted onto a lifting beam to suspend lifting equipment beneath, such as a chain hoist. This allows the load to travel along the direction of the lifting beam.

The EXE iBeam Trolleys are designed for HEA/IPE 100/200mm ADJUSTABLE.

WLL 1200kg with safety factor 5:1
(in combination with chain hoist).
WLL 1500kg with safety factor 4:1

BEAM TROLLEY

FEATURES

EXE IBEAM BEAM TROLLEY

GENERAL FEATURES

MODEL	EXE IBEAM Trolley
TYPE	Trolley
WLL	1200kg S.F. 5:1 | 1500kg S.F. 4:1
Body Colour	Black / Silver
HEA/IPE	100/200mm ADJUSTABLE
HAND CHAIN LENGHT	36m
BODY COLOUR	Black

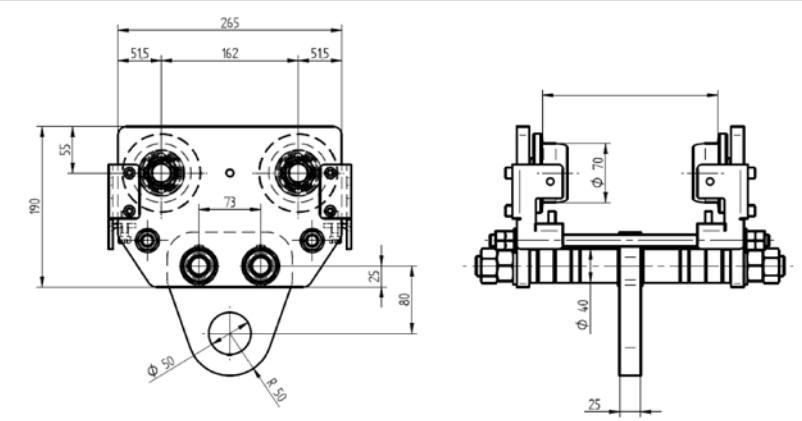

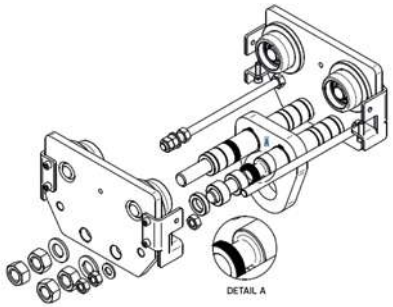

IPE

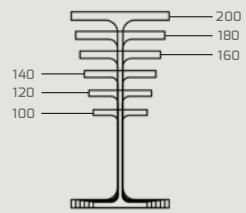

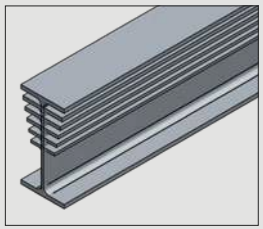

01

EXE DRIVE

EXE DRIVE CONTROLLER
PRACTICAL, SELECTABLE & WIDE RANGE

EXE Drive controllers are classified as either Basic or Linkable. Basic units allow for simple control without the ability to group units together whereas linkable units can be connected and operated altogether at the same time, allowing you to use up to 9 EXE Drive controllers or 8 drive controllers plus one remote.

The Basic 3-phase direct or low voltage control units are available in 4 or 8 channel modules. The Linkable 3-phase direct or low voltage control units are available in 4, 6, 8, 16, or 24 channel modules. Specialty units include the 8-channel wireless direct control unit and the single-phase 4-channel unit.

To operate hoists connected to EXE Drive controllers, a variety of remotes, pendants, and pickles are available. For the standalone hoist there's the standard single channel or 2-channel pickle, while for the Linkable Drive series there's multichannel solutions or simple pendants with stop-go or stop-go-reverse buttons, all of which are capable of performing without voltage drop or signal interruption with an XLR cable of up to 100 meters.

Possibility to customize for any voltage, frequency, plug, and socket requirements based on the electrical standards of your country.

Overview

3-PH CONTROLLERS	CHANNELS	LINKABLE	DIRECT CONTROL	LOW VOLTAGE CONTROL	DIGITAL REMOTE CONTROL		
	1	✗		XDRH1C-LV			
		✗	LDDH1				
	2	✗	LDDH2				
	4	✗	XDDB4	XDDB4-LV			
		✓	XDDL4	XDDL4-LV	XDRHG	XDRHGR	XDRH4C
		✗	XDDC4	✗	XDRHGC		
	8	✗	XDDB8	XDDB8-LV			
		✓	XDDL8	XDDL8-LV	XDRHG	XDRHGR	XDRH8C
		✓	XDDL8-H		XDRHG	XDRHGR	XDRH8C
		✗	XDDW8	✗			
		✗	XDDC8	✗	XDRHGC		
	16	✓	XDDL16	XDDL16-LV	XDRHG	XDRHGR	XDRH16C
	24	✓	XDDL24	XDDL24-LV	XDRHG	XDRHGR	XDRH24C

DH1

DIRECT CONTROL

LDDH1

1 CHANNEL PENDANT PUSH BUTTON

KEY FEATURES
Double-isolated yellow keypad in polyester
1 x Emergency Stop button
2 x mechanical interlock UP-DOWN switches (requires operator to be present)
Compatible with most chain hoists available on the market

TECHNICAL SPECIFICATIONS	
MAX POWER:	2.2kW
POWER SUPPLY:	1 plug CEE 230/400VAC 16A 6H 3+P+N+T IP67 with mechanical phase inverter
OUTPUTS:	1 x CEE 400VAC 16A 6H 3P+T IP67 flying plug
RATED OPERATIONAL CURRENT PER OUTPUT:	10A in AC3 – AC4
AMBIENT TEMPERATURE - STORAGE:	-25°C/+70°C
AMBIENT TEMPERATURE - OPERATION:	-25°C/+40°C
DIMENSIONS:	200x85x75.4 mm
WEIGHT:	1.5 kg

DH2

DIRECT CONTROL

LDDH2

2 CHANNEL PENDANT PUSH BUTTON

KEY FEATURES
Double-isolated yellow keypad in polyester
1 x Emergency Stop button
2 x mechanical interlock UP-DOWN switches (requires operator to be present)
Compatible with most chain hoists available on the market

TECHNICAL SPECIFICATIONS	
MAX POWER:	2.2kW
POWER SUPPLY:	1 plug CEE 230/400VAC 16A 6H 3+P+N+T IP67 with mechanical phase inverter
OUTPUTS:	2 x CEE 400VAC 16A 6H 3P+T IP67 flying plug
RATED OPERATIONAL CURRENT PER OUTPUT:	5A in AC3 – AC4
AMBIENT TEMPERATURE - STORAGE:	-25°C/+70°C
AMBIENT TEMPERATURE - OPERATION:	-25°C/+40°C
DIMENSIONS:	310x98x76 mm
WEIGHT:	2.0 kg

DB4

DIRECT CONTROL

XDDB4

4 CHANNEL BASIC CONTROLLER

KEY FEATURES - DIRECT CONTROL
3 Neon light for power supply indication
MCB 16A & GFI Breaker (30mA)
Emergency stop button
White GO button
4 x 3-travel direction selectors (UP-OFF-DOWN)

TECHNICAL SPECIFICATIONS	
POWER SUPPLY:	1 plug CEE 230/400VAC 32A 6H 3+P+N+E with mechanical phase inverter
OUTPUTS:	4 x CEE 400VAC 16A 6H 3P+T IP67 flying plug
DIMENSIONS:	3U rack box 260mm depth
WEIGHT:	12 kg

FRONT VIEW

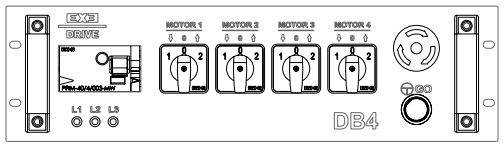

BACK VIEW

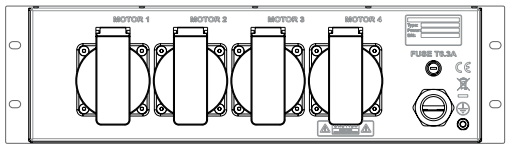

EX3 DRIVE

DB4-LV

LOW VOLTAGE CONTROL

XDSP2-LV
BREAK OUT ADAPTER MULTI-PIN
LOW VOLTAGE CONTROL

This adapter is used to split the Multi-Pin outlets out to 16amp power and control connectors to enable connection to chain hoists

XDDB4-LV

4 CHANNEL BASIC CONTROLLER

KEY FEATURES - LOW VOLTAGE CONTROL
3 Neon light for power supply indication
MCB 16A & GFI Breaker (30mA)
Emergency stop button
White GO button
4 x 3-travel direction selectors (UP-OFF-DOWN)
Protection General Contactor
Pickle Power

TECHNICAL SPECIFICATIONS	
POWER SUPPLY:	230/400VAC 32A 6H 3+P+N+E with mechanical phase inverter
OUTPUTS:	2 x 19 pin circular multi-pin female connector. Two channel power and 2 channel control per connector
DIMENSIONS:	3U rack box 260mm depth
WEIGHT:	12 kg

FRONT VIEW

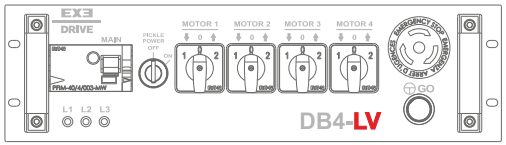

BACK VIEW

CONTROLLER

DB8

DIRECT CONTROL

XDDB8

8 CHANNEL BASIC CONTROLLER

KEY FEATURES - DIRECT CONTROL
3 Neon light for power supply indication
MCB 16A & GFI Breaker (30mA)
Emergency stop button
White GO button
8 x 3-travel direction selectors (UP-OFF-DOWN)
Protection General Contactor

TECHNICAL SPECIFICATIONS	
POWER SUPPLY:	1 plug CEE 230/400VAC 16A 6H 3+P+N+E with mechanical phase inverter
OUTPUTS:	8 x CEE 400VAC 16A 6H 3 P+E IP67 panel sockets
DIMENSIONS:	5U rack box 260mm depth
WEIGHT:	17 kg

FRONT VIEW

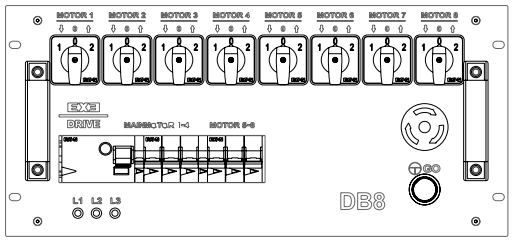

BACK VIEW

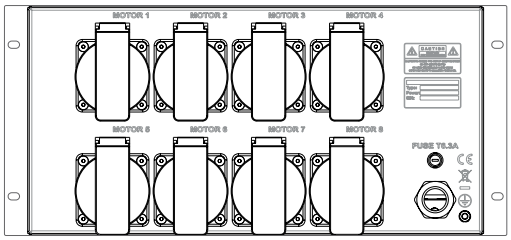

EX3 DRIVE

DB8-LV

LOW VOLTAGE CONTROL

XDSP2-LV
BREAK OUT ADAPTER MULTI-PIN
LOW VOLTAGE CONTROL

This adapter is used to split the Multi-Pin outlets out to 16amp power and control connectors to enable connection to chain hoists

XDDB8-LV

8 CHANNEL BASIC CONTROLLER

KEY FEATURES - LOW VOLTAGE CONTROL
3 Neon light for power supply indication
GFI 40A (30mA)
2 MCB 16A w/link functions between MCB and General Contactor for magneto-thermal cut off
Emergency stop button
White GO button
8 x 3-travel direction selectors (UP-OFF-DOWN)
Protection General Contactor
Pickle Power

TECHNICAL SPECIFICATIONS	
POWER SUPPLY:	1 plug CEE 230/400VAC 32A 6H 3+P+N+E with mechanical phase inverter
OUTPUTS:	4 x 19 pin circular multi-pin female connector. 2 channel power and 2 channel control per connector
DIMENSIONS:	5U rack box 260mm depth
WEIGHT:	18.5 kg

FRONT VIEW

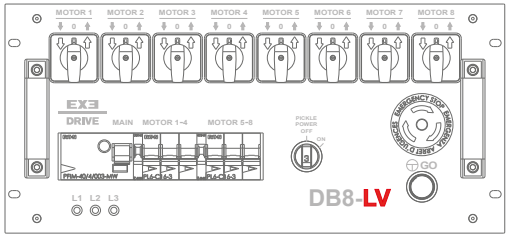

BACK VIEW

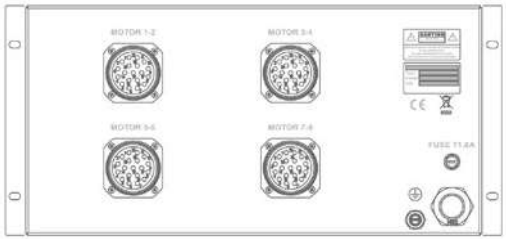

DL4

DIRECT CONTROL

XDDL4

4 CHANNEL MULTILINK CONTROLLER

KEY FEATURES - DIRECT CONTROL
Power Led Light Green / Red for Phase Rotation indication 123 / 132
GFI 40A (30mA)
4 MCB 10A w/link functions between MCB and General Contactor for magneto-thermal cut off
4 x direction contactor reversal
Emergency Stop button
White GO button with light indication
4 x 3-position travel direction switches (UP-OFF-DOWN)
4 x green LED lights indicating channel UP preselection
4 x white LED lights indicating channel DOWN preselection
XLR 5-pole OUT Link panel socket
XLR 5-pole IN Link + REMOTE panel socket
2x XLR 4-pole for load cell / limit switch / E-stop
The unit is supplied with a 1 meter link cable XLR 5-pole male/female

TECHNICAL SPECIFICATIONS	
POWER SUPPLY:	1 plug CEE 230/400VAC 32A 6H 3+P+N+E with mechanical phase inverter
OUTPUTS:	4 x CEE 400VAC 16A 6H 3P+E panel sockets
DIMENSIONS:	5U rack box 300mm depth
WEIGHT:	21 kg

FRONT VIEW

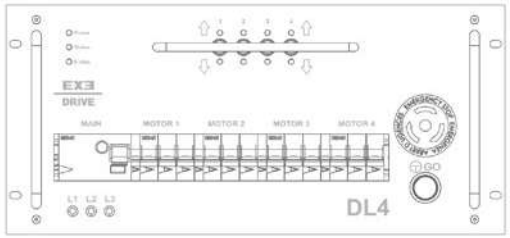

BACK VIEW

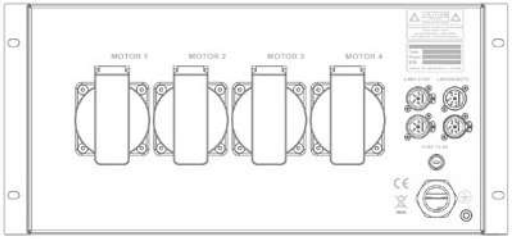

EX3 DRIVE

DL4-LV

LOW VOLTAGE CONTROL

XDSP2-LV
BREAK OUT ADAPTER MULTI-PIN
LOW VOLTAGE CONTROL

This adapter is used to split the Multi-Pin outlets out to 16amp power and control connectors to enable connection to chain hoists

XDDL4-LV
4 CHANNEL MULTILINK CONTROLLER

KEY FEATURES - LOW VOLTAGE CONTROL
Power Led Light Green / Red for Phase Rotation indication 123 / 132
GFI 40A (30mA)
4 MCB 10A w/link functions between MCB and General Contactor for magneto-thermal Cut off
4 x direction contactor reversal
Emergency Stop button
White GO button with light indication
4 x 3-position travel direction switches (UP-OFF-DOWN)
4 x green LED lights indicating channel UP preselection
4 x white LED lights indicating channel DOWN preselection
XLR 5-pole OUT Link panel socket
XLR 5-pole IN Link + REMOTE panel socket
2x XLR 4-pole for load cell / limit switch / E-stop
The unit is supplied with a 1 meter link cable XLR 5-pole male/female

TECHNICAL SPECIFICATIONS	
POWER SUPPLY:	1 plug CEE 230/400VAC 32A 6H 3+P+N+E with mechanical phase inverter
OUTPUTS:	2 x 19 pin circular multi-pin female connector. 2 channel power and 2 channel control per connector
DIMENSIONS:	5U rack box 300mm depth
WEIGHT:	21 kg

FRONT VIEW

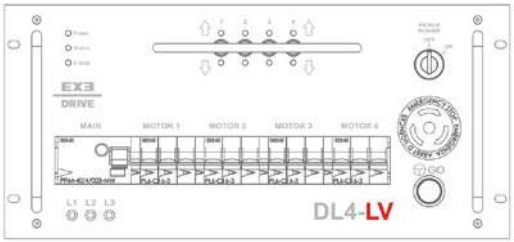

BACK VIEW

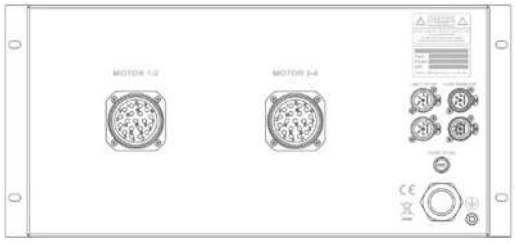

DL8

DIRECT CONTROL

XDDL8

8 CHANNEL MULTILINK CONTROLLER

KEY FEATURES - DIRECT CONTROL
Power Led Light Green / Red for Phase Rotation indication 123 / 132
GFI 40A (30mA)
4 MCB 10A w/link functions between MCB and General Contactor for magneto-thermal cut off
8 x direction contactor reversal
Emergency Stop button
White GO button with light indication
8 x 3-position travel direction switches (UP-OFF-DOWN)
8 x green LED lights indicating channel UP preselection
8 x white LED lights indicating channel DOWN preselection
XLR 5-pole OUT Link panel socket
XLR 5-pole IN Link + REMOTE panel socket
2x XLR 4-pole for load cell / limit switch / E-stop
The unit is supplied with a 1 meter link cable XLR 5-pole male/female

TECHNICAL SPECIFICATIONS	
POWER SUPPLY:	1 plug CEE 230/400VAC 32A 6H 3+P+N+E with mechanical phase inverter
OUTPUTS:	8 x CEE 400VAC 16A 6H 3P+T panel sockets
DIMENSIONS:	5U rack box 300mm depth
WEIGHT:	25 kg

FRONT VIEW

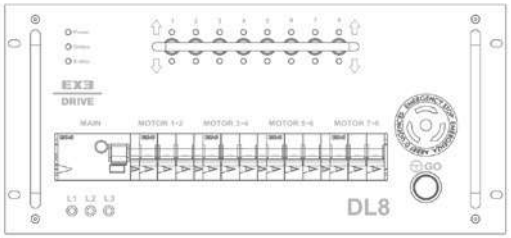

BACK VIEW

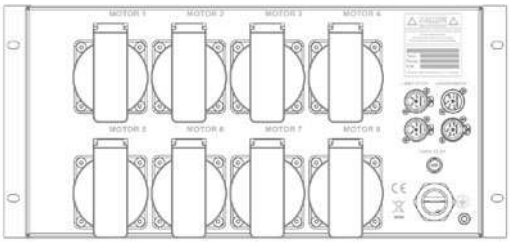

EX3 DRIVE

DL8-LV

LOW VOLTAGE CONTROL

XDSP2-LV
BREAK OUT ADAPTER MULTI-PIN
LOW VOLTAGE CONTROL

This adapter is used to split the Multi-Pin outlets out to 16amp power and control connectors to enable connection to chain hoists

XDDL8-LV

8 CHANNEL MULTILINK CONTROLLER

KEY FEATURES - LOW VOLTAGE CONTROL

- Power Led Light Green / Red for Phase Rotation indication 123 / 132
- GFI 40A (30mA)
- 4 MCB 10A w/link functions between MCB and General Contactor for magneto-thermal Cut off
- 8 x direction contactor reversal
- Emergency Stop button
- White GO button with light indication
- 8 x 3-position travel direction switches (UP-OFF-DOWN)
- 8 x green LED lights indicating channel UP preselection
- 8 x white LED lights indicating channel DOWN preselection
- XLR 5-pole OUT Link panel socket
- XLR 5-pole IN Link + REMOTE panel socket
- 2x XLR 4-pole for load cell / limit switch / E-stop
- The unit is supplied with a 1 meter link cable XLR 5-pole male/female

TECHNICAL SPECIFICATIONS

POWER SUPPLY:	1 plug CEE 230/400VAC 32A 6H 3+P+N+E with mechanical phase inverter
OUTPUTS:	2 x 19 pin circular multi-pin female connector. 2 channel power and 2 channel control per connector
DIMENSIONS:	5U rack box 300mm depth
WEIGHT:	25 kg

FRONT VIEW

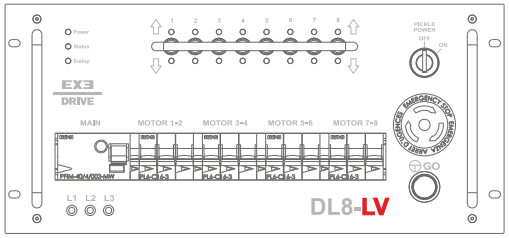

BACK VIEW

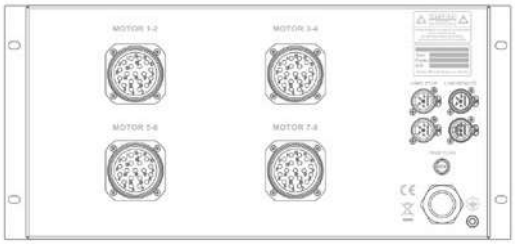

DL8H

DIRECT CONTROL

XDDL8H

8 CHANNEL HIGH MULTILINK CONTROLLER

KEY FEATURES - DIRECT CONTROL
Power Led Light Green / Red for Phase Rotation indication 123 / 132
GFI 40A (30mA)
4 MCB 10A w/link functions between MCB and General Contactor for magneto-thermal cut off
8 x direction contactor reversal
Emergency Stop button
White GO button with light indication
8 x 3-position travel direction switches (UP-OFF-DOWN)
8 x green LED lights indicating channel UP preselection
8 x white LED lights indicating channel DOWN preselection
XLR 5-pole OUT Link panel socket
XLR 5-pole IN Link + REMOTE panel socket
2x XLR 4-pole for load cell / limit switch / E-stop
The unit is supplied with a 1 meter link cable XLR 5-pole male/female

TECHNICAL SPECIFICATIONS	
POWER SUPPLY:	1 plug CEE 230/400VAC 63A 6H 3 P+N+E with mechanical phase inverter
OUTPUTS:	8 x CEE 400VAC 16A 6H 3P+T panel sockets
DIMENSIONS:	5U rack box 300mm depth
WEIGHT:	27.5 kg

FRONT VIEW

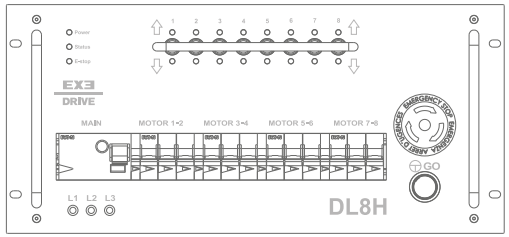

BACK VIEW

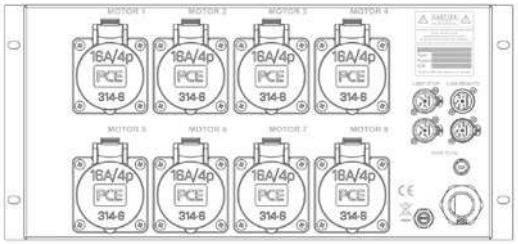

Power
Status
E-stop
EXE
DRIVE
MAIN
MOTOR 1-2
MOTOR 3-4
DL8H
L1
L2
L3

DL16

DIRECT CONTROL

FRONT VIEW

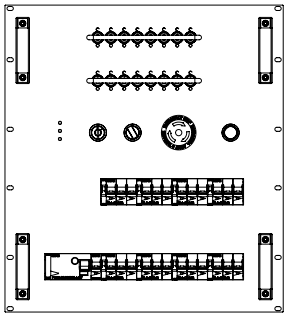

BACK VIEW

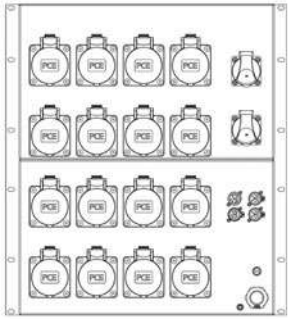

XDDL16

16 CHANNEL MULTILINK CONTROLLER

KEY FEATURES - DIRECT CONTROL

- Power Led Light Green / Red for Phase Rotation indication 123 / 132
- GFI 40A (30mA)
- 8 MCB 10A w/link functions between MCB and General Contactor for magneto-thermal cut off
- 16 x direction contactor reversal
- Emergency Stop button
- White GO button with light indication
- 16 x 3-position travel direction switches (UP-OFF-DOWN)
- 16 x green LED lights indicating channel UP preselection
- 16 x white LED lights indicating channel DOWN preselection
- XLR 5-pole OUT Link panel socket
- XLR 5-pole IN Link + REMOTE panel socket
- 2x XLR 4-pole for load cell / limit switch / E-stop
- The unit is supplied with a 2 meters link cable XLR 5-pole male/female

TECHNICAL SPECIFICATIONS

POWER SUPPLY:	1 plug CEE 230/400VAC 63A 6H 3 P+N+E with mechanical phase inverter
OUTPUTS:	16 x CEE 400VAC 16A 6H 3P+E panel sockets
DIMENSIONS:	12U rack box 300mm depth
WEIGHT:	44 kg

EX3 DRIVE

DL16-LV

LOW VOLTAGE CONTROL

XDSP2-LV
BREAK OUT ADAPTER MULTI-PIN LOW VOLTAGE CONTROL

This adapter is used to split the Multi-Pin outlets out to 16amp power and control connectors to enable connection to chain hoists

FRONT VIEW

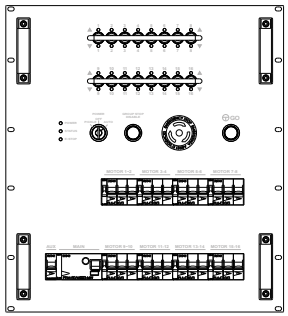

BACK VIEW

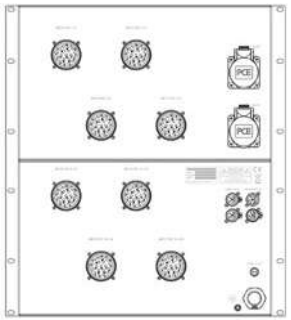

XDDL16-LV
16 CHANNEL MULTILINK CONTROLLER

KEY FEATURES - LOW VOLTAGE CONTROL
Power Led Light Green / Red for Phase Rotation indication 123 / 132
GFI 40A (30mA)
8 MCB 10A w/link functions between MCB and General Contactor for magneto-thermal Cut off
16 x direction contactor reversal
Emergency Stop button
White GO button with light indication
16 x 3-position travel direction switches (UP-OFF-DOWN)
16 x green LED lights indicating channel UP preselection
16 x white LED lights indicating channel DOWN preselection
XLR 5-pole OUT Link panel socket
XLR 5-pole IN Link + REMOTE panel socket
2x XLR 4-pole for load cell / limit switch / E-stop
The unit is supplied with a 1 meter link cable XLR 5-pole male/female
Pickle function

TECHNICAL SPECIFICATIONS	
POWER SUPPLY:	1 plug CEE 230/400VAC 63A 6H 3+P+N+E with mechanical phase inverter
OUTPUTS:	8 x 19 pin circular multi-pin female connector. 2 channel power and 2 channel control per connector
DIMENSIONS:	12U rack box 300mm depth
WEIGHT:	44 kg

DL24

DIRECT CONTROL

FRONT VIEW

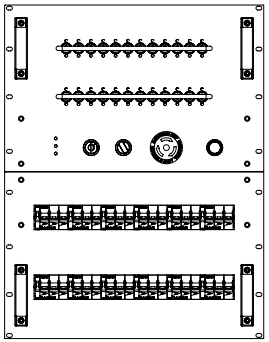

BACK VIEW

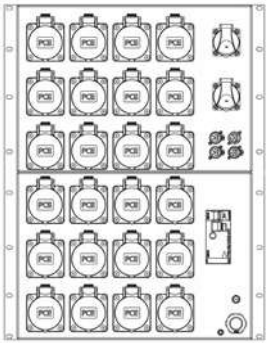

XDDL24

24 CHANNEL MULTILINK CONTROLLER

KEY FEATURES - DIRECT CONTROL
Power Led Light Green / Red for Phase Rotation indication 123 / 132
GFI 40A (30mA)
12 MCB 10A w/link functions between MCB and General Contactor for magneto-thermal cut off
24 x direction contactor reversal
Emergency Stop button
White GO button with light indication
24 x 3-position travel direction switches (UP-OFF-DOWN)
24 x green LED lights indicating channel UP preselection
24 x white LED lights indicating channel DOWN preselection
XLR 5-pole OUT Link panel socket
XLR 5-pole IN Link + REMOTE panel socket
2x XLR 4-pole for load cell / limit switch / E-stop
The unit is supplied with a 2 meters link cable XLR 5-pole male/female

TECHNICAL SPECIFICATIONS	
POWER SUPPLY:	1 plug CEE 230/400VAC 63A 6H 3 P+N+E with mechanical phase inverter
OUTPUTS:	24 x CEE 400VAC 16A 6H 3P+E panel sockets
DIMENSIONS:	14U rack box 300mm depth
WEIGHT:	47 kg

EX3 DRIVE

DL24-LV

LOW VOLTAGE CONTROL

XDSP2-LV
BREAK OUT ADAPTER MULTI-PIN
LOW VOLTAGE CONTROL

This adapter is used to split the Multi-Pin outlets out to 16amp power and control connectors to enable connection to chain hoists

FRONT VIEW

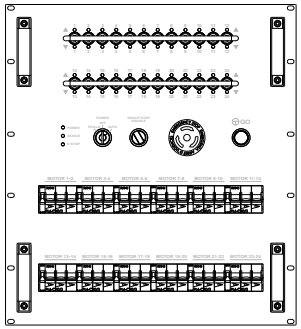

BACK VIEW

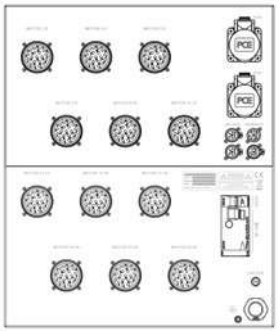

XDDL24-LV
24 CHANNEL MULTILINK CONTROLLER

KEY FEATURES - LOW VOLTAGE CONTROL
Power Led Light Green / Red for Phase Rotation indication 123 / 132
GFI 40A (30mA)
12 MCB 10A w/link functions between MCB and General Contactor for magneto-thermal Cut off
24 x direction contactor reversal
Emergency Stop button
White GO button with light indication
24 x 3-position travel direction switches (UP-OFF-DOWN)
24 x green LED lights indicating channel UP preselection
24 x white LED lights indicating channel DOWN preselection
XLR 5-pole OUT Link panel socket
XLR 5-pole IN Link + REMOTE panel socket
2x XLR 4-pole for load cell / limit switch / E-stop
The unit is supplied with a 2 meter link cable XLR 5-pole male/female
Pickle function

TECHNICAL SPECIFICATIONS	
POWER SUPPLY:	1 plug CEE 230/400VAC 63A 6H 3 P+N+E with mechanical phase inverter
OUTPUTS:	12 x 19 pin circular multi-pin female connector. 2 channel power and 2 channel control per connector
DIMENSIONS:	12U rack box 300mm depth
WEIGHT:	47 kg

DW8

WIRELESS CONTROLLER

BASE UNIT

Wireless receiver
Function key switch with OFF/LOCAL/WIRELESS control modes
Charger and storage for the REMOTE unit
LED indication for GO button, wireless signal presence, charger status

REMOTE UNIT

Wireless transmitter
Integrated antenna inside the body
Standard Motorola Li-Ion battery
Battery status indication LED
Beeper alarm function
Device status LED
Metal belt clip

XDDW8

8 CHANNEL WIRELESS CONTROLLER

KEY FEATURES
2.4GHz working frequency with dual encryption
Switches with UP/STAY/DOWN function
GO and Emergency STOP button
Dry contacts on outputs

TECHNICAL SPECIFICATIONS	
POWER SUPPLY:	AC230V / 50Hz / 16A
DIMENSIONS:	3U 19" box
WEIGHT:	12.5

Operable only in combination with the DL8 motor controller

FRONT VIEW

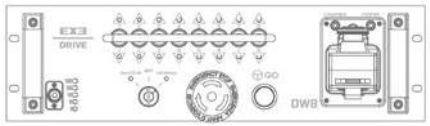

BACK VIEW

Power
Status
E-stop
EXE
DRIVE
MAIN

EX3 DRIVE

DC4R - DC8R

SUITCASE CONTROLLER

XDDC4R 4 CHANNEL SUITCASE CONTROLLER

KEY FEATURES
Controls up to 4 direct voltage hoist
Manual Phase Align (MPA) using power input connector
Housing in robust plastic case
Emergency Stop button
White GO button
Magneto-thermal cut off
4 x 3-cam changeover switch (UP-OFF-DOWN)
Protection General Contactor

TECHNICAL SPECIFICATIONS	
POWER SUPPLY:	CEE 32/5p
OUTPUTS:	RCBO C16A/30mA
DIMENSIONS:	340 x 424 x 173 mm
WEIGHT:	8 kg

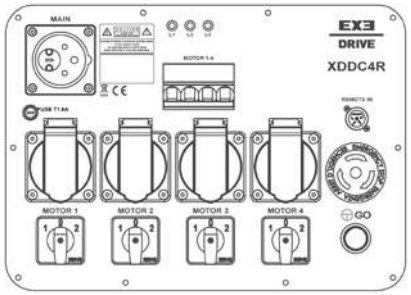

XDDC8R 8 CHANNEL SUITCASE CONTROLLER

KEY FEATURES
Controls up to 8 direct voltage hoist
Manual Phase Align (MPA) using power input connector
Housing in robust plastic case
Emergency Stop button
White GO button
Magneto-thermal cut off
8 x 3-cam changeover switch (UP-OFF-DOWN)
Protection General Contactor

TECHNICAL SPECIFICATIONS	
POWER SUPPLY:	CEE 32/5p
OUTPUTS:	RCBO C16A/30mA
DIMENSIONS:	406 x 503 x 193 mm
WEIGHT:	11.5 kg

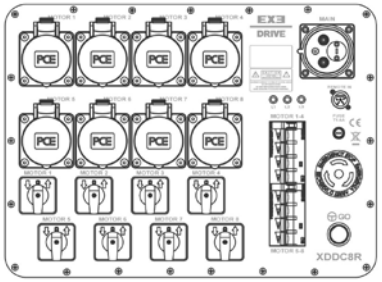

EX3 DRIVE

DC4R-SP

SINGLE PHASE

SUITCASE CONTROLLER

XDDC4R-SP 4 CHANNEL SUITCASE CONTROLLER

KEY FEATURES
Controls up to 4 direct voltage hoist
Manual Phase Align (MPA) using power input connector
Housing in robust plastic case
Emergency Stop button
White GO button
Magneto-thermal cut off
4 x 3-cam changeover switch (UP-OFF-DOWN)
Protection General Contactor

TECHNICAL SPECIFICATIONS	
POWER SUPPLY:	CEE 16/3p
OUTPUTS:	RCBO C16A/30mA
DIMENSIONS:	340 x 424 x 173 mm
WEIGHT:	8 kg

FRONT VIEW

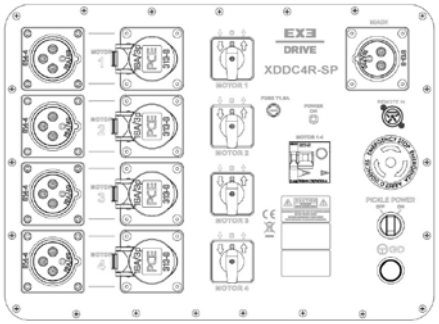

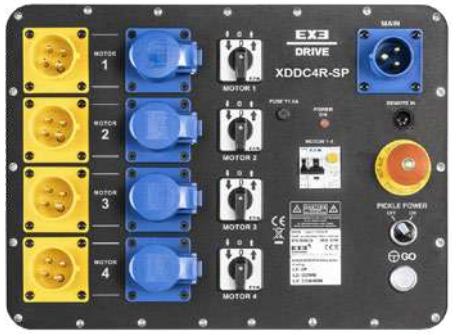

RHG - RHGR

DIGITAL REMOTE CONTROL

XDRHG

REMOTE EMERGENCY BUTTON STOP/GO

KEY FEATURES
Yellow double-isolated pendant push button in self-extinguishing thermoplastic material, applied only to XRL 5-pole OUT Link panel plug provided with the DL controllers
1 x Red stop button
1 x White flashing LED to enable Go function from remote control
1 x Green Go button
Cable length: 15m
1 x XLR 5-pole socket connector

XDRHGR

REMOTE EMERGENCY BUTTON STOP/GO/REVERSE

KEY FEATURES
Yellow double-isolated pendant push button in self-extinguishing thermoplastic material, applied only to XRL 5-pole OUT Link panel plug provided with the DL controllers
1 x Red stop button
1 x White flashing LED to enable Go function from remote control
1 x Green Go button
Cable length: 15m
1 x XLR 5-pole socket connector
1 x White button for Reverse function

RHGC

DIGITAL REMOTE CONTROL

XDRHGC

CABLE REMOTE WITH GO AND E-STOP BUTTONS

KEY FEATURES
Simple remote for XDDCR series EXE Drive controllers
Compatible only with Briefcase Controller DC (4-8 channels)
GO and E-STOP buttons
Cable length according to client's needs
4-pin NEUTRIK male connector

TECHNICAL SPECIFICATIONS	
DIMENSIONS:	260 x 66 x 75 mm
WEIGHT:	0.87 kg

COMPATIBLE WITH

EXE Drive XDDC4R, XDDC8R, XDDC4R-SP briefcase controllers

XDDC4R

XDDC8R

XDDC4R-SP

RH4C - RH8C

DIGITAL REMOTE CONTROL

XDRH4C DIGITAL CABLE REMOTE CONTROL 4 CHANNELS

KEY FEATURES
1 x Stop mushroom button
White GO button with light indication
4 x Direction switch with light indication
4 Bicolor green / white LED lights indicating channel UP / DOWN preselection
Bicolor green / orange LED
Cable XLR5 male-female to be ordered separately

TECHNICAL SPECIFICATIONS	
MATERIAL:	Sturdy 2 mm thick aluminium box, gray powder coated pendant push button
DIMENSIONS:	22.5 x 10.6 x 9.5 mm
WEIGHT:	0.9 kg

XDRH8C DIGITAL CABLE REMOTE CONTROL 8 CHANNELS

KEY FEATURES
1 x Stop mushroom button
White GO button with light indication
8 x Direction switch with light indication
8 Bicolor green / white LED lights indicating channel UP / DOWN preselection
Bicolor green / orange LED
Cable XLR5 male-female to be ordered separately

TECHNICAL SPECIFICATIONS	
MATERIAL:	Sturdy 2 mm thick aluminium box, gray powder coated pendant push button
DIMENSIONS:	29 x 10.6 x 9.5 mm
WEIGHT:	1.2 kg

RH16C - RH24C

DIGITAL REMOTE CONTROL

XDRH16C DIGITAL CABLE REMOTE CONTROL 16 CHANNELS

KEY FEATURES

- 1 x Stop mushroom button
- White GO button with light indication
- 4 x Direction switch with light indication
- 4 Bicolor green / white LED lights indicating channel UP / DOWN preselection
- Bicolor green / orange LED
- Cable XLR5 male-female to be ordered separately

TECHNICAL SPECIFICATIONS

MATERIAL:	Sturdy 2 mm thick aluminium box, gray powder coated pendant push button
DIMENSIONS:	22.5 x 10.6 x 9.5 mm
WEIGHT:	0.9 kg

XDRH24C DIGITAL CABLE REMOTE CONTROL 24 CHANNELS

KEY FEATURES

- 1 x Stop mushroom button
- White GO button with light indication
- 4 x Direction switch with light indication
- 4 Bicolor green / white LED lights indicating channel UP / DOWN preselection
- Bicolor green / orange LED
- Cable XLR5 male-female to be ordered separately

TECHNICAL SPECIFICATIONS

MATERIAL:	Sturdy 2 mm thick aluminium box, gray powder coated pendant push button
DIMENSIONS:	22.5 x 10.6 x 9.5 mm
WEIGHT:	0.9 kg

SP2-LV RH1C-LV

LOW VOLTAGE CONTROL

XDSP2-LV SPIDER

BREAK-OUT ADAPTER MULTI-PIN

KEY FEATURES

- This adapter is required to split the 19 male pin Multi-pin outlets out to 16A CEE connectors to enable connection to chain hoists.
- 19 Pin circular multi-pin male connector
- 4 x 100cm long legs wired on 4G 1.5m/sq H07 RNF cable
- CEE 16A 6h 400VAC - 3PH + G red socket
- CEE 16A 4h 24VAC - 3PH + G yellow plug

XDRH1C-LV PICKLE

1 CHANNEL UP-DOWN

KEY FEATURES

- Double insulated enclosures in thermoplastic self-extinguishing material
- IP65 rating
- Operating temperature -25° +70°C
- 2 directions mechanically interlocked: UP & DOWN

EXE DRIVE

COMPATIBILITY CHART

EXE TECHNOLOGY MOTOR CONTROLLER		EXE CHAIN HOIST						
		250kg	500kg	1000kg 1 REEVE	2000kg 2 REEVES	1600kg	2000Kg 1 REEVE	2500Kg 1 REEVE
	XDRH1C-LV	✓	✓	✓	✓	✓	✓	✗
LDDH1	LDDH2	✓	✓	✓	✓/✗	✓/✗	✗	✗
XDDL4	XDDL4-LV	✓	✓	✓	✓	✓	✓	✗
XDDL8	XDDL8-LV	✓	✓	✓	✗	✗	✗	✗
XDDL8H		✓	✓	✓	✓	✓	✓	✓
XDDL16	XDDL16-LV	✓	✓	✓	✗	✗	✗	✗
XDDL24	XDDL24-LV	✓	✓	✓	✗	✗	✗	✗
XDDB4	XDDB4-LV	✓	✓	✓	✗	✗	✗	✗
XDDB8	XDDB8-LV	✓	✓	✓	✗	✗	✗	✗
XDDC4R		✓	✓	✓	✗	✗	✗	✗
XDDC8R		✓	✓	✓	✗	✗	✗	✗

The values in the table refer to the standard **EXE Drive** Motor Controller.
On request the **EXE Drive** Motor Controllers can be customized. Contact our technical office for more information.

02

EXE SENSE CONTROLLER
INTUITIVE TOUCH AND QUICK

Precision at your fingertips. Control EXE Rise hoists through the digital touchscreen of the **EXE Sense**, the latest linkable hoist controller by EXE Technology. Command up to 64 hoists individually or in groupings by connecting linkable 8-channel EXE Sense units.

Use the touchscreen to either manually jog hoists into position or input the exact target. Alternatively, control hoists with the multi-channel touchscreen remote.

This international, One for All solution is available for either 208 or 400 volt power, depending on which configuration you require for saving events in your country. The system reliably communicates with any fixed speed hoists over distances up to 15 meters through XLR10 cable.

Overview

TOUCHSCREEN CONTROLLER - DL8S V2 6U							
	MODEL	CONTROL	CHANNELS	POWER SUPPLY	OUTPUT	DIMENSION	REMOTE
	DL8S-1 V2 6U	DC	8	1xCEE 32A/5P	8xCEE - 4P	6U	
	DL8S-2 V2 6U				8xCEE - 4P + 2xHARTING -16P		
	DL8S-3 V2 6U				8xCEE - 4P + 2xSOCAPEX -19P		

Touchscreen

Precision at your fingertips. Touchscreen display to facilitate movement operations and independently manage the groups.

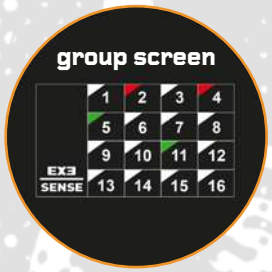

Power Supply Type

Customization of the power supply type (plug and socket) according to specific needs: CEE or CEE+Harting or CEE+Socapex

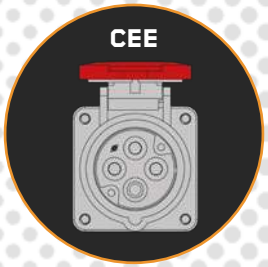

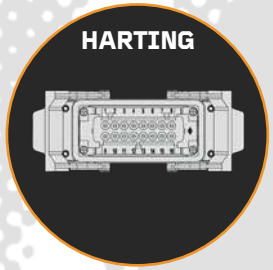

Group Control

EXE Sense provides intuitive and versatile control, including group control through the touchscreen.

Remote Control

Alternatively, control hoists with the multi-channel touchscreen remote.

Features

Linkable

Command up to 64 hoists individually or in groupings by connecting linkable 8 channel EXE Sense units.

Chain Hoist Compatibility

The system reliably communicates with any fixed speed hoists over distances up to 100 meters through Cat5e cable.

FIXED SPEED

The EXE SENSE controller operates at a fixed speed, ensuring consistent performance.

EX3 SENSE

DL8S V2 6U

TOUCHSCREEN CONTROLLER

DL8S V2 6U

8 CHANNEL 6 RACK UNITS

KEY FEATURES
LED Touch multi-color display
GFI 40A (30mA)
4 MCB 10A w/link functions between MCB and general contactor for magneto-thermal cut off
8x reversing contactor
Emergency Stop mushroom button
White GO button
RJ45 LINK OUT
RJ45 LINK IN
Fuse 2A

1 CEE	2 CEE + HARTING	3 CEE + SOCAPEX
POWER SUPPLY		
1 Plug CEE 230/400VAC 32A 6H 3P+N+T	1 Plug CEE 230/400VAC 32A 6H3P+N+T	1 Plug CEE 230/400VAC 32A 6H 3P+N+T
OUTPUTS		
8 x CEE 400VAC 16A 6H 3P+T panel sockets	8 x CEE 400VAC 16A 6H 3P+T panel sockets + 2 ILME - 16p	8 x CEE 400VAC 16A 6H 3P+T panel sockets + 2 SOCAPEX - 19p
DIMENSIONS		
6U RACK BOX 300mm depth	6U RACK BOX 300mm depth	6U RACK BOX 300mm depth
WEIGHT		
30kg	30kg	30kg

COMPATIBLE WITH
XNDLRH REMOTE CONTROL

DLRH

REMOTE CONTROL

XNDLRH

REMOTE HANDLE TOUCHSCREEN CONTROL

KEY FEATURES
LED Touchscreen multi-color display
Emergency Stop mushroom button
White GO button
RJ45 connector
The unit is supplied with maximum 15 meters link cable connector

TECHNICAL SPECIFICATIONS	
OUTPUTS:	RJ45 connector
WEIGHT:	5kg

FRONT VIEW

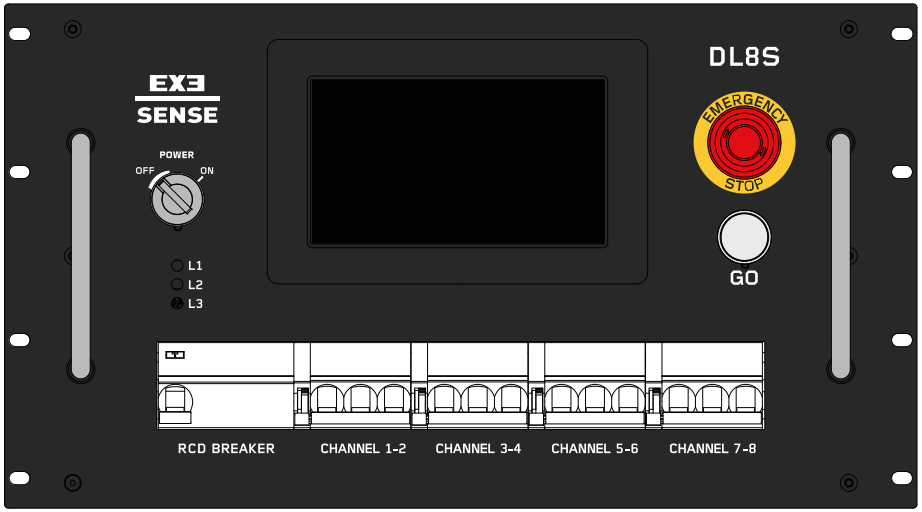

3 CONFIGURATIONS
DL8S-1 CEE
DL8S-2 CEE + HARTING
DL8S-3 CEE + SOCAPEX

DL8S-1 CEE

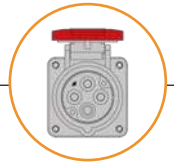

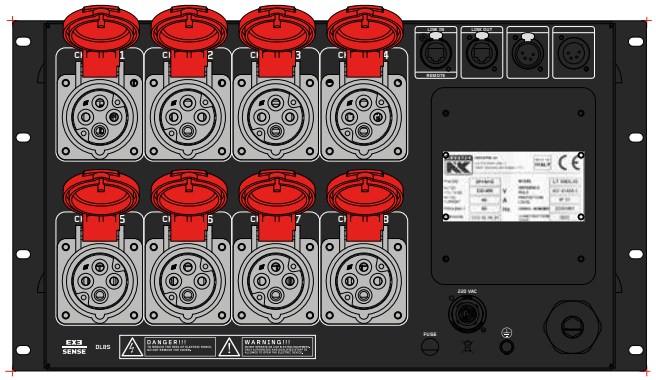

DL8S-2 CEE + HARTING

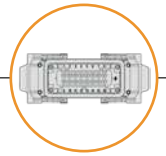

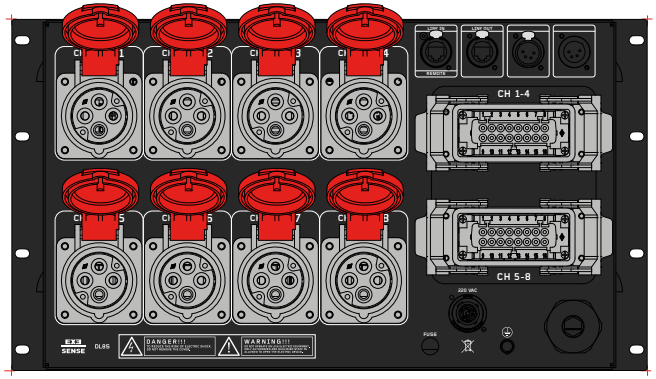

DL8S-3 CEE + SOCAPEX

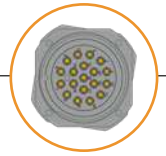

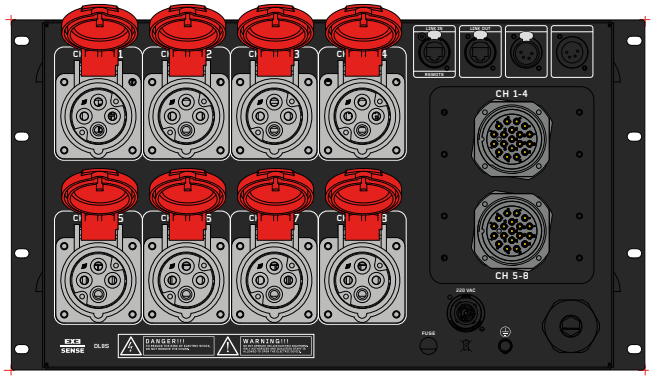

EX3 SENSE

DL8S V2 6U

CEE

DL8S-1

DL8S-1 CEE

TECHNICAL SPECIFICATIONS	
POWER SUPPLY	1 Plug CEE 230/400VAC 32A 6H 3P+N+T
OUTPUTS	8 x CEE 400VAC 16A 6H 3P+T panel sockets
DIMENSIONS	6U RACK BOX 300mm depth
WEIGHT	30kg

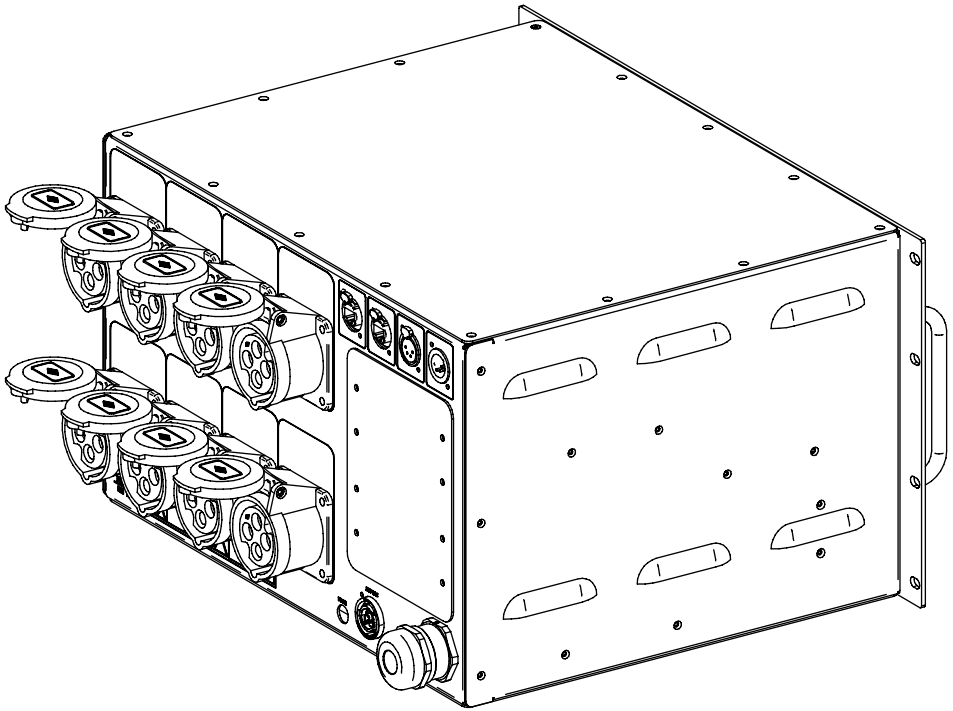

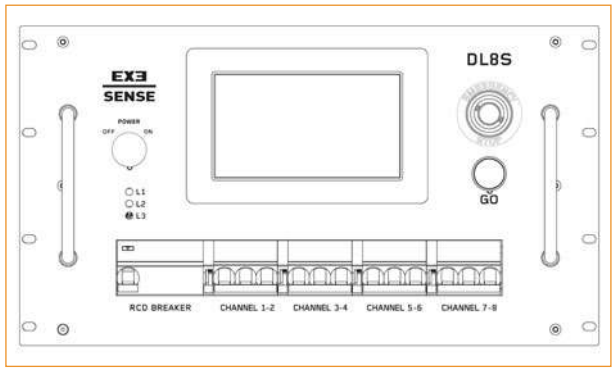

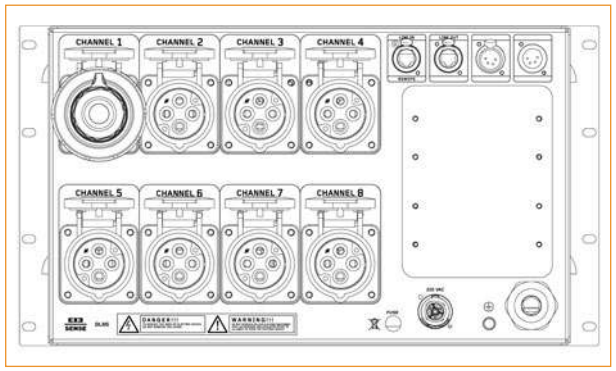

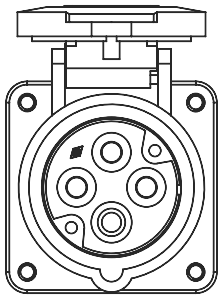

CEE plug

DL8S V2 6U

CEE + HARTING

HARTING WIRING DIAGRAM

MOTOR	PIN	DESCRIPTION
MOTOR 1	PIN 1 PIN 5 PIN 9 PIN 13	L1 L2 L3 PE
MOTOR 2	PIN 2 PIN 6 PIN 10 PIN 14	L1 L2 L3 PE
MOTOR 3	PIN 3 PIN 7 PIN 11 PIN 15	L1 L2 L3 PE
MOTOR 4	PIN 4 PIN 8 PIN 12 PIN 16	L1 L2 L3 PE
	BODY	PE

L1 **Phase 1**
L2 **Phase 2**
L3 **Phase 3**
NC **Not connected**
PE **Earth**

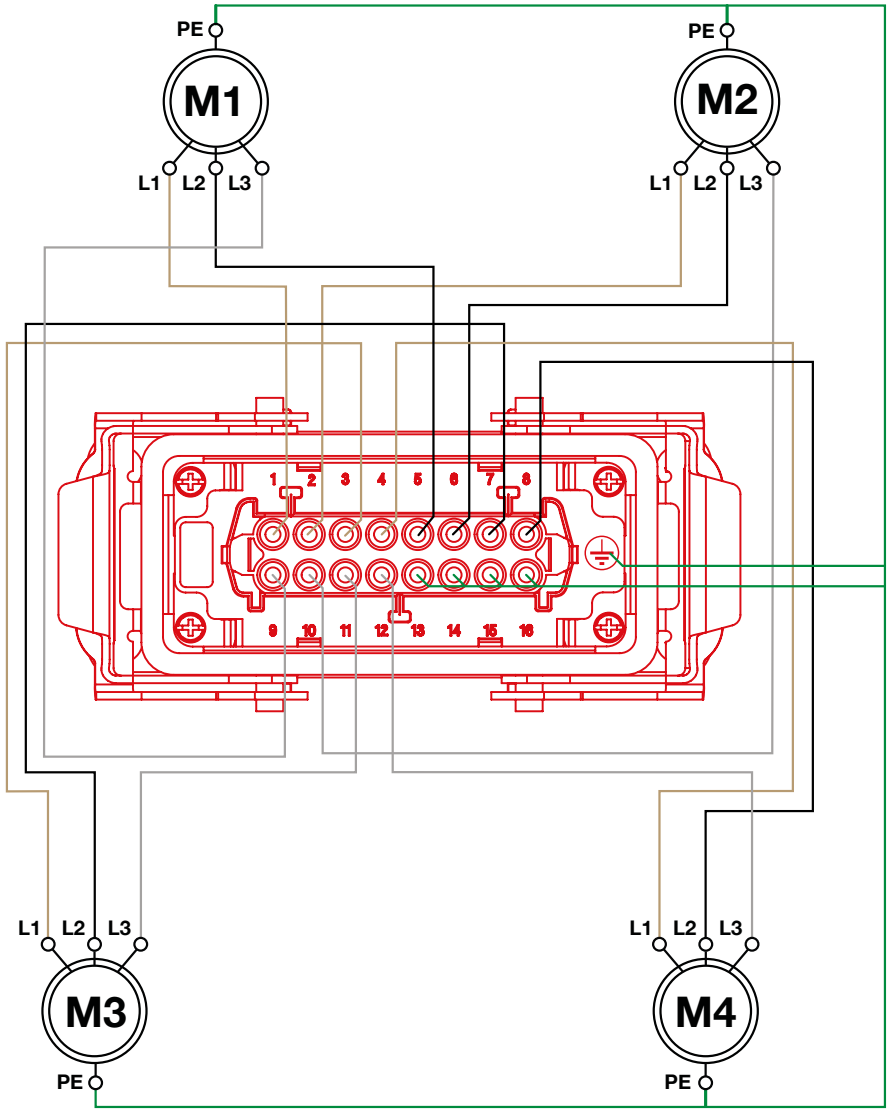

DL8S-2

HARTING WIRING OPTIONS

PIN	STANDARD OPTION A	OPTION B*	OPTION C*	OPTION D*	OPTION E*	OPTION F*
PIN 1	Motor 1 L1	Motor 1 L1	Motor 1 L1	Motor 1 L1	Motor 1 L1	Motor 1 L1
PIN 2	Motor 2 L1	Motor 1 L2	Motor 1 L2	Motor 1 L2	Motor 1 L2	Motor 1 L2
PIN 3	Motor 3 L1	Motor 1 L3	Motor 1 L3	Motor 1 L3	Motor 1 L3	Motor 1 L3
PIN 4	Motor 4 L1	Motor 1 PE	Motor 2 L1	Motor 2 L1	Motor 2 L1	Motor 2 L1
PIN 5	Motor 1 L2	Motor 2 L1	Motor 2 L2	Motor 2 L2	Motor 2 L2	Motor 2 L2
PIN 6	Motor 2 L2	Motor 2 L2	Motor 2 L3	Motor 2 L3	Motor 2 L3	Motor 2 L3
PIN 7	Motor 3 L2	Motor 2 L3	Motor 1 PE	NC	Motor 3 L1	Motor 3 L1
PIN 8	Motor 4 L2	Motor 2 PE	Motor 2 PE	NC	Motor 3 L2	Motor 3 L2
PIN 9	Motor 1 L3	Motor 3 L1	Motor 3 L1	Motor 3 L1	Motor 3 L3	Motor 3 L3
PIN 10	Motor 2 L3	Motor 3 L2	Motor 3 L2	Motor 3 L2	Motor 4 L1	Motor 4 L1
PIN 11	Motor 3 L3	Motor 3 L3	Motor 3 L3	Motor 3 L3	Motor 4 L2	Motor 4 L2
PIN 12	Motor 4 L3	Motor 4 PE	Motor 4 L1	Motor 4 L1	Motor 4 L3	Motor 4 L3
PIN 13	Motor 1 PE	Motor 4 L1	Motor 4 L2	Motor 4 L2	NC	Motor 1 PE
PIN 14	Motor 2 PE	Motor 4 L2	Motor 4 L3	Motor 4 L3	NC	Motor 2 PE
PIN 15	Motor 3 PE	Motor 4 L3	Motor 3 PE	NC	NC	Motor 3 PE
PIN 16	Motor 4 PE	Motor 4 PE	Motor 4 PE	NC	NC	Motor 4 PE
BODY	PE	PE	NC	PE	PE	PE

*Available only upon specific request

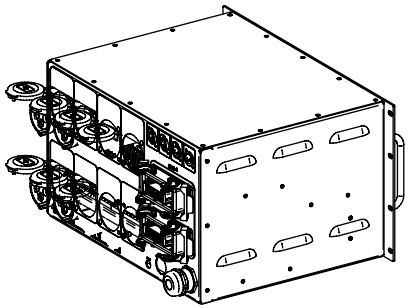

DL8S V2 6U

CEE + SOCAPEX

SOCAPEX STANDARD WIRING DIAGRAM

MOTOR	IN	DESCRIPTION
MOTOR 1	PIN 1 PIN 2 PIN 3 PIN 13	L1 L2 L3 PE
MOTOR 2	PIN 4 PIN 5 PIN 6 PIN 14	L1 L2 L3 PE
MOTOR 3	PIN 7 PIN 8 PIN 9 PIN 15	L1 L2 L3 PE
MOTOR 4	PIN 10 PIN 11 PIN 12 PIN 16	L1 L2 L3 PE
	PIN 17 PIN 18 PIN 19	NC NC NC

L1 **Phase 1**
L2 **Phase 2**
L3 **Phase 3**
NC **Not connected**
PE **Earth**

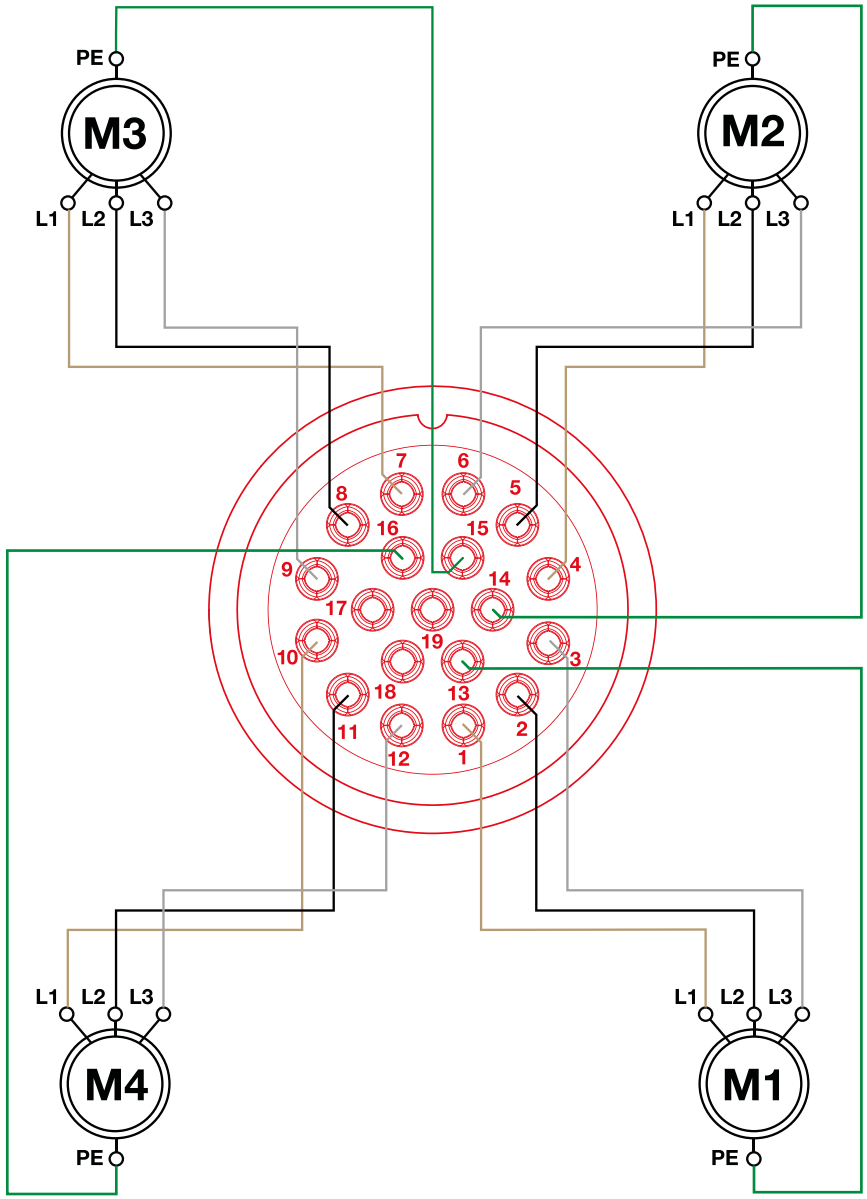

SOCAPEX WIRING OPTIONS

PIN	STANDARD OPTION A	OPTION B*	OPTION C*	OPTION D*	OPTION E*	OPTION F*
PIN 1	Motor 1 L1	Motor 1 L1	Motor 1 L1	Motor 1 L1	Motor 1 L1	Motor 1 L1
PIN 2	Motor 1 L2	Motor 1 L2	Motor 1 L2	Motor 1 L2	Motor 2 L1	Motor 2 L1
PIN 3	Motor 1 L3	Motor 1 L3	Motor 1 L3	Motor 1 L3	Motor 1 L2	Motor 1 L2
PIN 4	Motor 2 L1	Motor 2 L1	Motor 2 L1	Motor 2 L1	Motor 2 L2	Motor 2 L2
PIN 5	Motor 2 L2	Motor 2 L2	Motor 2 L2	Motor 2 L2	Motor 1 L3	Motor 1 L3
PIN 6	Motor 2 L3	Motor 2 L3	Motor 2 L3	Motor 2 L3	Motor 2 L3	Motor 2 L3
PIN 7	Motor 3 L1	Motor 3 L1	Motor 3 L1	Motor 3 L1	Motor 3 L1	Motor 3 L1
PIN 8	Motor 3 L2	Motor 3 L2	Motor 3 L2	Motor 3 L2	Motor 4 L1	Motor 4 L1
PIN 9	Motor 3 L3	Motor 3 L3	Motor 3 L3	Motor 3 L3	Motor 3 L2	Motor 3 L2
PIN 10	Motor 4 L1	Motor 4 L1	Motor 4 L1	Motor 4 L1	Motor 4 L2	Motor 4 L2
PIN 11	Motor 4 L2	Motor 4 L2	Motor 4 L2	Motor 4 L2	Motor 3 L3	Motor 3 L3
PIN 12	Motor 4 L3	Motor 4 L3	Motor 4 L3	Motor 4 L3	Motor 4 L3	Motor 4 L3
PIN 13	Earth 1	Earth 1	Earth	Earth 1	Earth 1	Earth
PIN 14	Earth 2	Earth 2	Earth	NC	Earth 2	Earth
PIN 15	Earth 3	Earth 3	Earth	Earth 2	Earth 3	Earth
PIN 16	Earth 4	Earth 4	Earth	Earth 3	Earth 4	Earth
PIN 17	NC	Earth	Earth	NC	NC	Earth
PIN 18	NC	Earth	Earth	Earth 4	NC	Earth
PIN 19	NC	Earth	Earth	NC	NC	NC

*Available only upon specific request

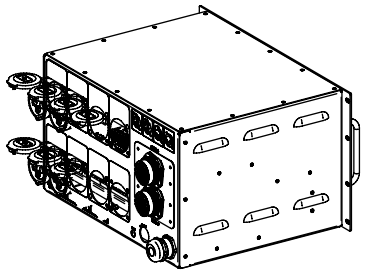

EXE
SENSE
01
REVERSE
02
REVERSE
REVERSE
05
REVERSE
06
REVERSE
07
REVERSE
POWER
OFF
ON
L1
L2
L3
RCD BREAKER

EX3 RISE

EX3 ACE

Compatibility Chart

EX3 SENSE

CHAIN HOIST COMPATIBILITY						
MEDIUM FRAME ULTRA COMPACT	MEDIUM FRAME COMPACT	MEDIUM FRAME	LARGE FRAME 1 REEVE	LARGE FRAME 2 REEVES	EXTRA LARGE FRAME COMPACT 1/2 REEVES	EXTRA LARGE FRAME 1/2 REEVES
✓	✓	✓	✓	✗	✗	✗

CONTROLLER

ALL FOR ONE SOLUTIONS

ALL FOR ONE
SOLUTIONS

ALL FOR ONE is designed as a fully integrated system including 'smart' hoists and intelligent controllers, offering plug and play devices. It is the integration between equipment designed to operate as a 'single' stage machine.

EXE B DUAL SPEED

DUAL SPEED FOR FAST AND PRECISION CONTROL

EXE D DIGITAL SYSTEM

LOAD MONITORING / PROTECTION & POSITION CONTROL SYSTEM

ALL FOR ONE SOLUTIONS

EXE X SMART SYSTEM

VARIABLE SPEED SMART SYSTEM WITH LOAD MONITORING / PROTECTION AND POSITIONAL CONTROL

EXE E ETC SYSTEM

COMBINATION OF EXE FIXED SPEED CHAIN HOISTS AND THE ETC MOTOR CONTROL INTERFACE

EXE K KINESYS SYSTEM

EXE K IS AN INGENIOUS SYSTEM OBTAINED BY THE COMBINATION OF EXE VARIABLE SPEED CHAIN HOISTS AND THE KINESYS CONTROL INTERFACE

ALL FOR ONE FEATURES

	EX3 B	EX3 D
LINKABLE		
TOUCH SCREEN		
GROUP CONTROL		
ENCODER		
LOAD CELL		
REMOTE CONTROL		
SPEED	DUAL FIXED SPEED	FIXED SPEED
HARD LIMIT SWITCH	On request	On request
SOFT LIMIT SWITCH	No	UP & DOWN

EX3 X	EX3 K	EX3 C
MULTIPLE SELECTABLE SPEED	VARIABLE SPEED	FIXED SPEED
2 position	**4 position**	**4 position**
UP & DOWN	**UP & DOWN**	**UP & DOWN**

EXE B

DUAL SPEED

EXE B XNSB8

DUAL SPEED CONTROLLER

KEY FEATURES
8 Channels
Linkable to 64 channel (max 8 controller)
8x 16A CEE 4 pin F (hoist) 2x XLR10 (link) 8x IMLE 4 pin M (speed control)
400VAC 32A 3PH+N+E 50Hz
compatible with **XNSBRH REMOTE CONTROL**
only compatible with: **EXE B DUAL SPEED chain hoist** **D8+ 500kg dual speed (2 or 8 m/min)**

EXE D XNSD8

DIGITAL CONTROLLER

KEY FEATURES

8 Channels

Linkable to 64 channel (max 8 controller)

8x 16A CEE 4 pin F (hoist)
2x EtherCon (link)
8x XLR6 F (encoder)
1x XLR5 F (load cells)
1x EtherCon

400VAC 32A 3PH+N+E 50Hz

compatible with **XNSDRH REMOTE CONTROL**

only compatible with **EXE D D8+ chain hoists**

D8+
500kg

D8+
1000kg

D8+
2000kg

EXE X

SMART

EXE X XNSX8

SMART CONTROLLER

KEY FEATURES
8 Channels
Linkable to 64 channel (max 8 controller)
8x 16A CEE 4 pin F (hoist) 2x EtherCon (link) 8x XLR6 F (encoder) 1x XLR5 F (load cells) 1x EtherCon
400VAC 32A 3PH+N+E 50Hz

compatible with **XNSXRH REMOTE CONTROL**

only compatible with **EXE X D8+ chain hoists**

D8+ **500kg**

D8+ **1000kg**

D8+ **2000kg**

EXE E

ETC SYSTEM

EXE E is an intelligent system obtained by the combination of EXE TECHNOLOGY Fixed Speed Chain Hoists and the ETC Motor Control Interface

The "**EXE E**" system from **EXE TECHNOLOGY** represents another step forward in the stage machinery product category for the entertainment market worldwide.
Through the collaboration with the company **ETC**, we have been able to build a range of chain hoist capable to communicate and be controlled by the ETC Rigging Control system range of products.

This result has been made possible, by mounting inside our chain hoist, the **ETC Rigging Motor Control Interface** (**MCI**). The ETC MCI is nothing else than an electronic PLC interface that allows **EXE TECHNOLOGY fixed speed D8+ chain hoist ½ TON & 1 TON** (4 m/min or 8 m/min) equipped with encoder, limit switches and load cell to be managed and controlled by ETC Rigging Control System range of products including: QuickTouch, QuickTouch+ and Foundation.

EXE E CHAIN HOIST	
D8+ 500kg	D8+ 1000kg
	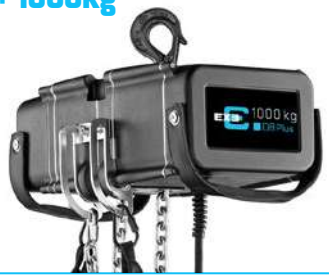

EXE K

VARIABLE SPEED

EXE K is an ingenious system obtained by the combination of EXE Variable speed chain hoists and the Kinesys control interface.

- Both Windows PC and touchscreen console option available
- 4 Limit Switches, Incremental Encoder and optional Load Cell;
  Hard-wired E-Stop and Dead Man control;
- Max distance from controller to last Chain Hoist 150m (max distance depends on configuration);
  Temperature Range: 0° - 40°C / Humidity to 30% non-condensing;
- Electronics installed into the chain hoist body, and inverted housed in an external case for easy swap with other devices.
- Visual Status feedback on LCD;
- Data Transmitted on a XLR7 cable;
- Compatible with your pre-owned EXE K and Kinesys-converted machines;
- Remote Control available

EXE K CHAIN HOIST

D8+ 500kg

D8+ 1000kg

EX3
SD8
GO
EX3
SX8
GO
EX3
DUAL
SPEED
EX3
500 kg
D8 Plus
EX3
500 kg
D8 Plus
EX3
500 kg
D8 Plus
BOTTEGA
DUROBA

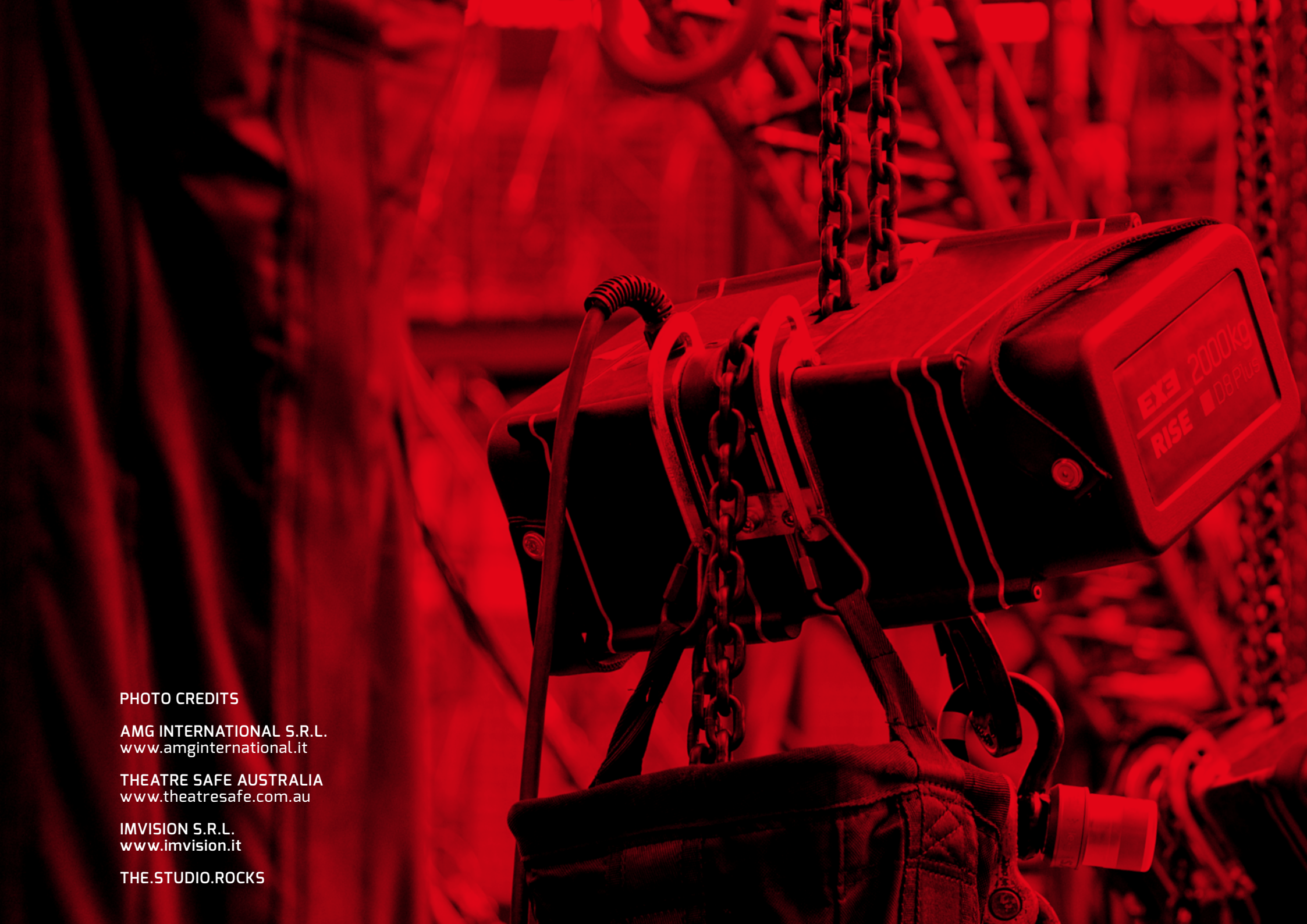

PHOTO CREDITS

AMG INTERNATIONAL S.R.L.
www.amginternational.it

THEATRE SAFE AUSTRALIA
www.theatresafe.com.au

IMVISION S.R.L.
www.imvision.it

THE.STUDIO.ROCKS

Ver. 23

EXE TECHNOLOGY

Area Four Industries Italia s.r.l.
Via Martin Luther King, 70
Casale sul Sile (TV), 31032

Tel +39 0422 997300
info@exetechnology.com
www.exetechnology.com

SAFE · PRECISE · CERTIFIED

Area Four Industries